NOTES:

1. WORKMANSHIP, CONSTRUCTION, STITCHING AND QUALITY ASSURANCE PROVISIONS SHALL CONFORM TO PURCHASE DESCRIPTION, FAMILY OF IMPROVED LOAD BEARING EQUIPMENT DATED 10 MAY 2011.
2. UNLESS OTHERWISE NOTED, ALL STITCHING CONFORM TO FED-STD-751:
   F THREAD, TYPE 301---------- 7 TO 11 SPI
   E THREAD, BARTACK---------- 42 TO 48 SPI
3. ALL STITCHING SHALL BE BACKSTITCHED NOT LESS THAN 1/2 INCH UNLESS TURNED UNDER BY A HEM OR HELD BY OTHER STITCHING.
4. ALL STITCHING TO BE 1/8 INCH FROM EDGE OR APART, UNLESS OTHERWISE SPECIFIED.
5. UNLESS OTHERWISE SPECIFIED, TOLERANCES SHALL BE AS FOLLOWS:
   1/8 INCH OR MORE BUT LESS THAN 2 INCHES --- ±1/16
   2 INCHES OR MORE BUT LESS THAN 10 INCHES -- ±1/8
   10 INCHES OR MORE BUT LESS THAN 36 INCHES - ±1/4
   36 INCHES OR MORE ---------- ±3/8
6. SEAR ALL ENDS OF WEBBING AND TAPE TO PREVENT FRAYING. AVOID FORMING SHARP EDGES.
7. UNLESS OTHERWISE SPECIFIED ALL FOLDS, HEMS, AND TURN UNDERS SHALL BE 3/8".
8. DIMENSION DEPICTS MATERIAL SHOWN IN STRETCHED/OUT SEWN CONDITION

REVISIONS

ZONE	LTR	DESCRIPTION	PROJ OFCR	APVD	DATE
	-	INITIAL RELEASE PER DR-S-010-11	T. S.	T. S.	11-05-20

THIS DRAWING HAS BEEN GENERATED AND IS MAINTAINED BY A CAD SYSTEM. CHANGES SHALL ONLY BE INCORPORATED AS DIRECTED BY THE DESIGN ACTIVITY.

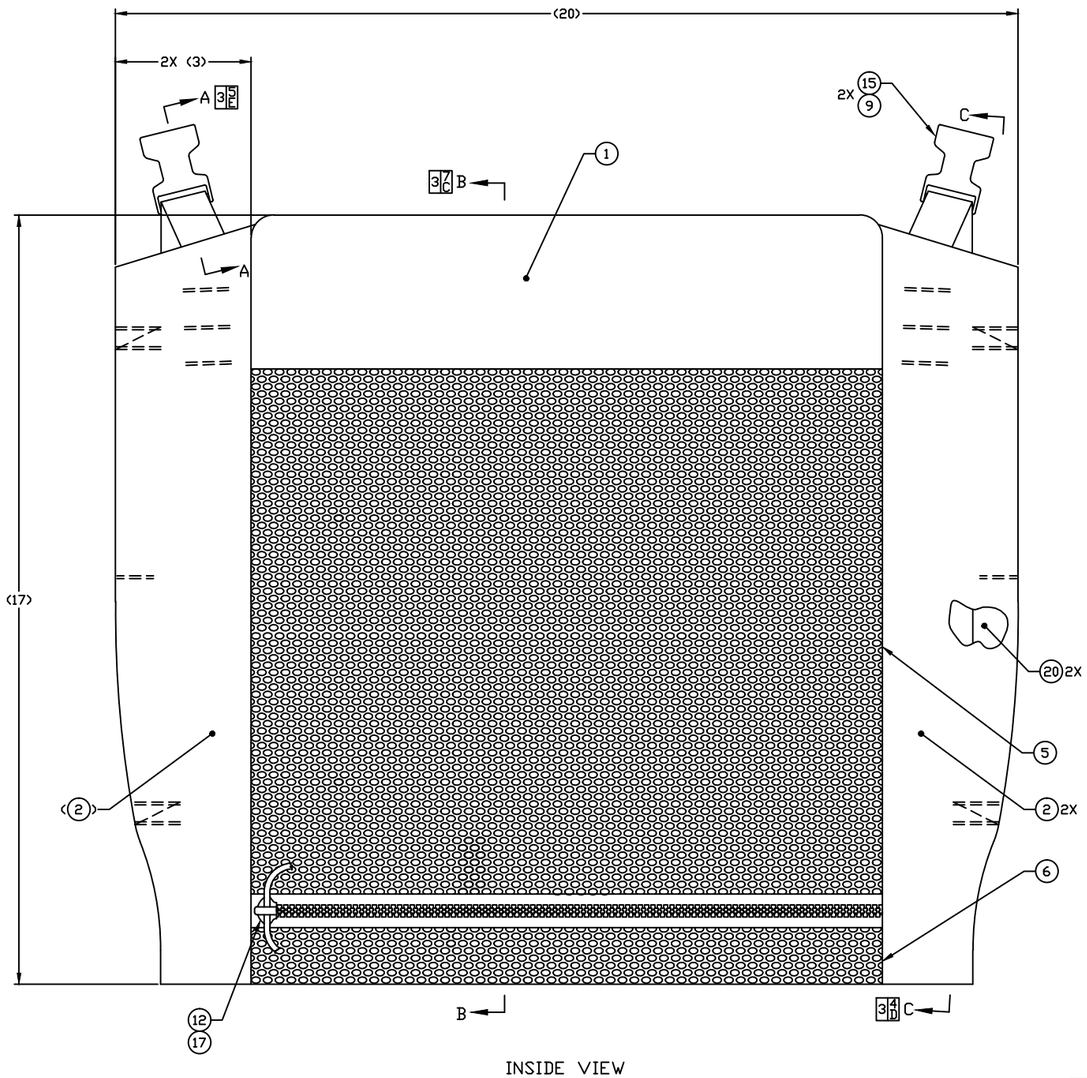

INSIDE VIEW
-1

SEE SEPARATE PARTS LIST

DISTRIBUTION STATEMENT A
THIS DOCUMENT IS APPROVED FOR PUBLIC RELEASE; DISTRIBUTION IS UNLIMITED.

REVISION STATUS OF SHEETS			
-	-	-	REVISION
3	2	1	SHEET

INTERPRET THIS DRAWING IN ACCORDANCE WITH ASME Y14.100

UNLESS OTHERWISE SPECIFIED DIMENSIONS ARE IN INCHES
TOLERANCES:
ANGLES ±
FRACTIONS ±
2 PLACE DIM ±
3 PLACE DIM ±

NEXT ASSY	USED ON
2-6-0894	2-6-0894
APPLICATION	

DATE 11-05-01
DRAWN BY E. TAMSKY
CHECKED F. W. K.
PROJ OFCR T. SCOTT
APPROVED K. RYAN
APPROVAL DESIGN ACTIVITY J. CONNOR
APPLICABLE SPEC PD-XX-XXXX

U.S. ARMY NATICK SOLDIER RESEARCH, DEVELOPMENT & ENGINEERING CENTER
KANSAS STREET, NATICK MA. 01760-5056

LID, USMC MAIN PACK ASSEMBLY

SIZE E | CAGE 81337 | DRAWING NO. 2-6-0903
SCALE: 1/1 | UNIT WT. | SHEET 1 OF 3

2-6-0903

G:\Drafting1\marine corp pack\2-6-0903S1.dwg

REVISIONS					
ZONE	LTR	DESCRIPTION	PROJ DFCR	APVD	DATE
	-	INITIAL RELEASE PER DR-S-010-11	T. S.	T. S.	11-05-20

THIS DRAWING HAS BEEN GENERATED AND IS MAINTAINED BY A CAD SYSTEM. CHANGES SHALL ONLY BE INCORPORATED AS DIRECTED BY THE DESIGN ACTIVITY.

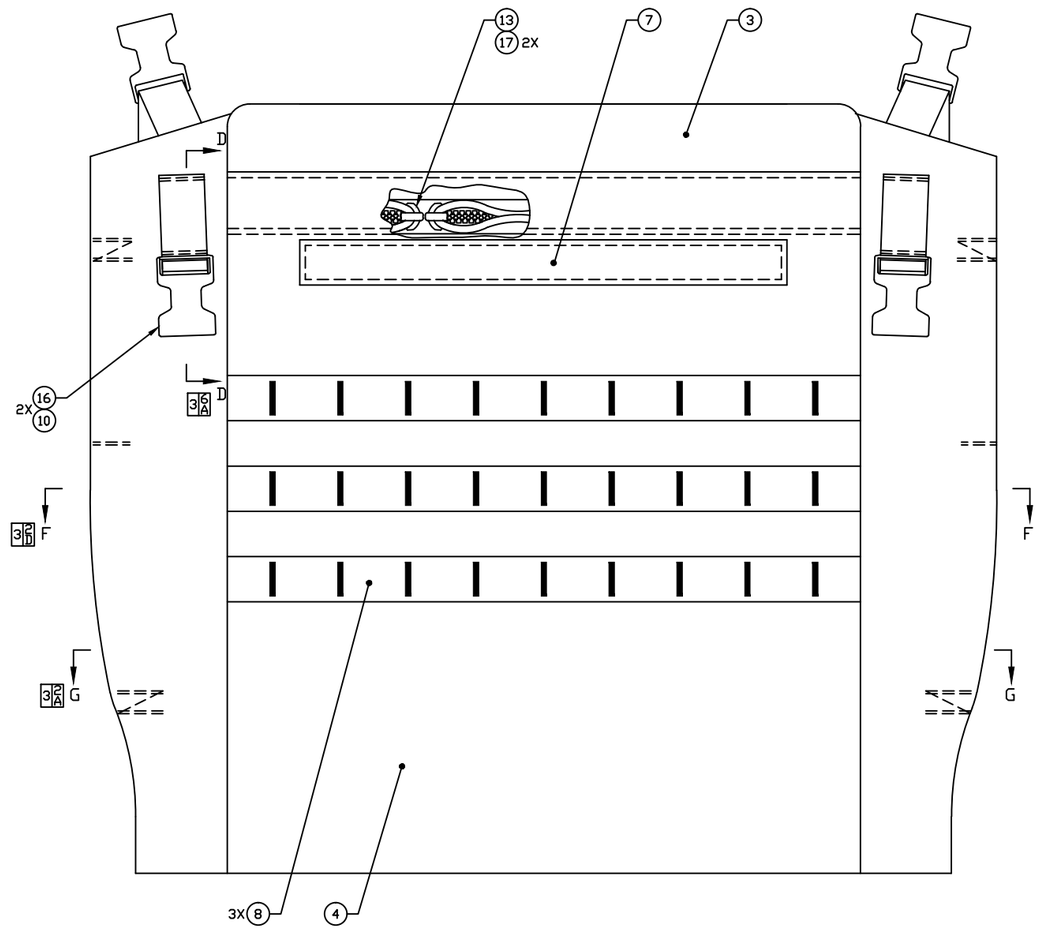

OUTSIDE VIEW

DISTRIBUTION STATEMENT A
THIS DOCUMENT IS APPROVED FOR PUBLIC RELEASE; DISTRIBUTION IS UNLIMITED.

SIZE	CAGE	DRAWING NO.
E	81337	2-6-0903
SCALE: 1/1	UNIT WT.	SHEET 2 OF 3

G:\Drafting1\marine corp pack\2-6-0903S2.dwg

REVISIONS					
ZONE	LTR	DESCRIPTION	PROJ DFCR	APVD	DATE
	-	INITIAL RELEASE PER DR-S-010-11	T. S.	T. S.	11-05-20

THIS DRAWING HAS BEEN GENERATED AND IS MAINTAINED BY A CAD SYSTEM. CHANGES SHALL ONLY BE INCORPORATED AS DIRECTED BY THE DESIGN ACTIVITY.

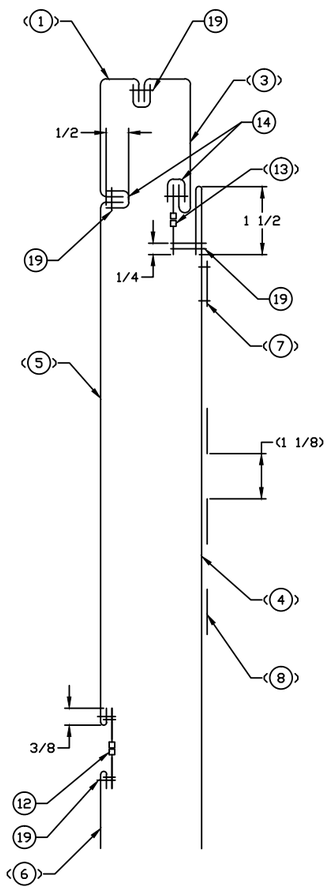

SECTION B-B 1 5/F

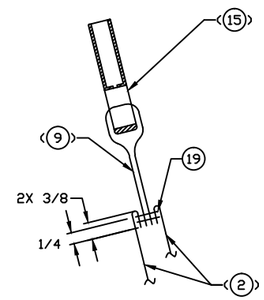

SECTION A-A 1 6/F
2X

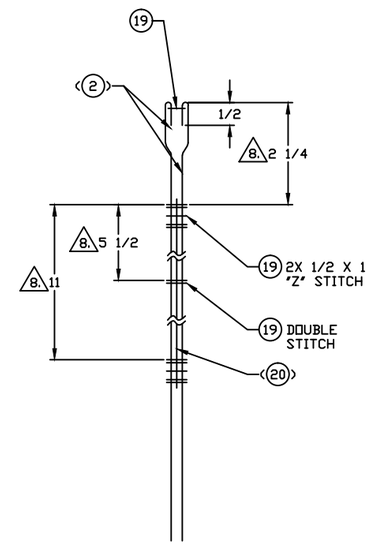

SECTION C-C 1 3/B
2X

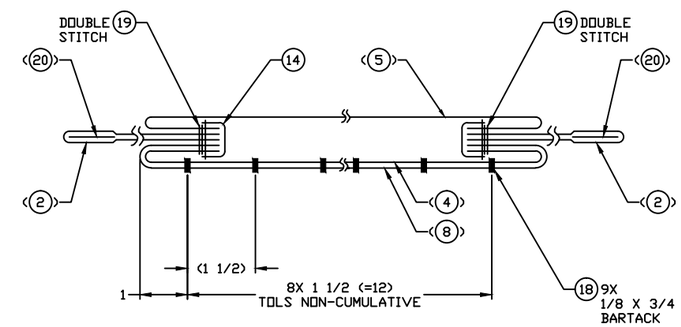

SECTION F-F 2 7/D
3X

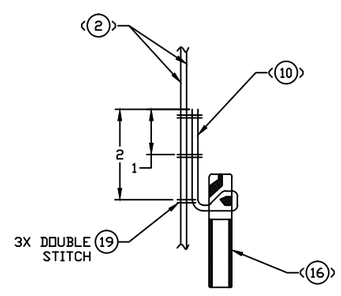

SECTION D-D 2 6/D
2X

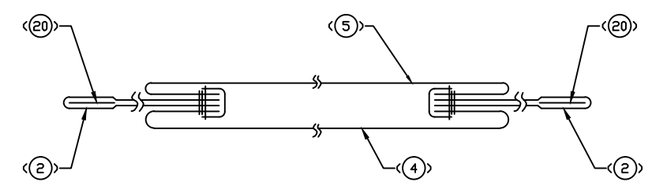

SECTION G-G 2 7/C

DISTRIBUTION STATEMENT A
THIS DOCUMENT IS APPROVED FOR PUBLIC RELEASE; DISTRIBUTION IS UNLIMITED.

SIZE	CAGE	DRAWING NO.
E	81337	2-6-0903
SCALE: 1/1	UNIT WT.	SHEET 3 OF 3

G:\Drafting1\marine corp pack\2-6-0903S3.dwg