REVISIONS				
REV	DESCRIPTION	PROJ OFCR	APVD	DATE
–	INITIAL RELEASE PER DR-S-010-11	T.S.	T.S.	11-05-20

THIS DRAWING HAS BEEN GENERATED AND IS MAINTAINED BY A CAD SYSTEM. CHANGES SHALL ONLY BE INCORPORATED AS DIRECTED BY THE DESIGN ACTIVITY.

1. REFER TO PURCHASE DESCRIPTION, FAMILY OF IMPROVED LOAD BEARING EQUIPMENT, DATED 10 MAY 2011.

2. CUT LENGTHS ARE FOR REFERENCE ONLY

DISTRIBUTION STATEMENT A
THIS DOCUMENT IS APPROVED FOR PUBLIC RELEASE; DISTRIBUTION IS UNLIMITED.

REV LEVEL	–	–	–	–	–	–	–	–	–	–						
SHEET NO.	1	2	3	4	5	6	7	8	9	10						

REVISION STATUS OF SHEETS

INTERPRET THIS DRAWING IN ACCORDANCE WITH ASME Y14.100

UNLESS OTHERWISE SPECIFIED:
DIMENSIONS ARE IN INCHES
TOLERANCES:
ANGLES ±
FRACTIONS ±
2 PLACE DIM ± NA
3 PLACE DIM ±

DATE	11-04-28
DRAWN BY	E. TAMSKY
CHECKED	K. VARNEY
PROJ OFCR	T. SCOTT
APPROVED	K. RYAN
APPROVAL DESIGN ACTIVITY	J. CONNOR
APPLICABLE SPEC	

U.S. ARMY NATICK SOLDIER
RESEARCH, DEVELOPMENT & ENGINEERING CENTER
KANSAS STREET, NATICK MA. 01760-5056

USMC MAIN PACK ASSEMBLY

SIZE	CAGE	DRAWING NO.
A	81337	PL2-6-0894

SCALE: NONE | UNIT WT. | SHEET 1 OF 10

NEXT ASSY	USED ON
–	–

APPLICATION

G:\Drafting1\marine corp pack\2-6-0894PL1.dwg

PARTS LIST	U.S. ARMY NATICK SOLDIER RESEARCH, DEVELOPMENT & ENGINEERING CENTER KANSAS STREET, NATICK MA. 01760-5056	CAGE 81337	PL2-6-0894	REVISION LTR – DATE 11-05-18
LIST TITLE	USMC MAIN PACK ASSEMBLY		APPROVED T. S. / T. S.	REV AUTH NO. DR-S-010-11 / SHEET 2 OF ____ SHEETS

FIND NO.	QTY RQD -1	CAGE	DRAWING OR DOCUMENT NUMBER	DWG SIZE	PART OR IDENTIFYING NUMBER	NOMENCLATURE OR DESCRIPTION	MATERIAL SPECIFICATION
1	1	81337	2-6-0903	E	2-6-0903-1	LID, USMC MAIN PACK ASSEMBLY	
2	1		2-6-0925 1.		2-6-0925-1	PATTERN, MAIN UPPER	PARA 3.12.7.2 CLOTH, NYLON, 500D
3	1		2-6-0925 1.		2-6-0925-2	PATTERN, SIDE LEFT	PARA 3.12.7.2 CLOTH, NYLON, 500D
4	1		2-6-0925 1.		2-6-0925-4	PATTERN, SIDE RIGHT	PARA 3.12.7.2 CLOTH, NYLON, 500D
5	1		2-6-0925 1.		2-6-0925-3	PATTERN, SIDE OUTER LEFT	PARA 3.12.7.2 CLOTH, NYLON, 500D
6	1		2-6-0925 1.		2-6-0925-5	PATTERN, SIDE OUTER RIGHT	PARA 3.12.7.2 CLOTH, NYLON, 500D
7	1		2-6-0925 1.		2-6-0925-8	PATTERN, MAIN BODY BACK	PARA 3.12.7.2 CLOTH, NYLON, 500D

PARTS LIST	U.S. ARMY NATICK SOLDIER RESEARCH, DEVELOPMENT & ENGINEERING CENTER KANSAS STREET, NATICK MA. 01760-5056	CAGE 81337	PL2-6-0894	REVISION LTR – DATE 11-05-20
LIST TITLE	USMC MAIN PACK ASSEMBLY		APPROVED T. S. / T. S.	REV AUTH NO. DR-S-010-11 / SHEET 3 OF ____ SHEETS

FIND NO.	QTY RQD -1	CAGE	DRAWING OR DOCUMENT NUMBER	DWG SIZE	PART OR IDENTIFYING NUMBER	NOMENCLATURE OR DESCRIPTION	MATERIAL SPECIFICATION
8	1		2-6-0925 1.		2-6-0925-27	PATTERN, RADIO POCKET, FRONT	PARA 3.12.7.2 CLOTH, NYLON, 500D
9	1		2-6-0925 1.		2-6-0925-35	PATTERN, COLLAR OUTER	PARA 3.12.7.2 CLOTH, NYLON, 500D
10	1		2-6-0925 1.		2-6-0925-31	PATTERN, RADIO ACCESS ZIPPER STRIP	PARA 3.12.7.2 CLOTH, NYLON, 500D
11	1		2-6-0925 1.		2-6-0925-30	PATTERN, RADIO ACCESS ZIPPER STRIP (BOTTOM)	PARA 3.12.7.2 CLOTH, NYLON, 500D
12	1		2-6-0925 1.		2-6-0925-32	PATTERN, INTERNAL DIVIDER	PARA 3.12.7.2 CLOTH, NYLON, 500D
13	1		2-6-0925 1.		2-6-0925-33	PATTERN, INTERNAL DIVIDER STRIP	PARA 3.12.7.2 CLOTH, NYLON, 500D
14	1		2-6-0925 1.		2-6-0925-7	PATTERN, LOWER COMPARTMENT ZIPPER STRIP	PARA 3.12.7.2 CLOTH, NYLON, 500D

PARTS LIST	U.S. ARMY NATICK SOLDIER RESEARCH, DEVELOPMENT & ENGINEERING CENTER KANSAS STREET, NATICK MA. 01760-5056	CAGE 81337	PL2-6-0894	REVISION LTR – DATE 11-05-18
LIST TITLE	USMC MAIN PACK ASSEMBLY		APPROVED T. S. / T. S.	REV AUTH NO. DR-S-010-11 / SHEET 4 OF ____ SHEETS

FIND NO.	QTY RQD -1	CAGE	DRAWING OR DOCUMENT NUMBER	DWG SIZE	PART OR IDENTIFYING NUMBER	NOMENCLATURE OR DESCRIPTION	MATERIAL SPECIFICATION
15	1		2-6-0925 1.		2-6-0925-6	PATTERN, MAIN, LOWER FRONT	PARA 3.12.7.2 CLOTH, NYLON, 500D
16	1		2-6-0925 1.		2-6-0925-9	PATTERN, OUTER BOTTOM	PARA 3.12.7.2 CLOTH, NYLON, 500D
17	1		2-6-0925 1.		2-6-0925-20	PATTERN, WATER BOTTLE POCKET BASE LEFT	PARA 3.12.7.2 CLOTH, NYLON, 500D
18	1		2-6-0925 1.		2-6-0925-19	PATTERN, WATER BOTTLE POCKET BASE RIGHT	PARA 3.12.7.2 CLOTH, NYLON, 500D
19	1		2-6-0925 1.		2-6-0925-26	PATTERN, WATER BOTTLE POCKET TOP LEFT	PARA 3.12.7.2 CLOTH, NYLON, 500D
20	1		2-6-0925 1.		2-6-0925-25	PATTERN, WATER BOTTLE POCKET TOP RIGHT	PARA 3.12.7.2 CLOTH, NYLON, 500D
21	1		2-6-0925 1.		2-6-0925-24	PATTERN, WATER BOTTLE MAIN LEFT	PARA 3.12.7.2 CLOTH, NYLON, 500D

PARTS LIST	U.S. ARMY NATICK SOLDIER RESEARCH, DEVELOPMENT & ENGINEERING CENTER KANSAS STREET, NATICK MA. 01760-5056	CAGE 81337	PL2-6-0894	REVISION LTR – DATE 11-05-18
LIST TITLE	USMC MAIN PACK ASSEMBLY		APPROVED T. S. / T. S.	REV AUTH NO. DR-S-010-11 / SHEET 5 OF ____ SHEETS

FIND NO.	QTY RQD -1	CAGE	DRAWING OR DOCUMENT NUMBER	DWG SIZE	PART OR IDENTIFYING NUMBER	NOMENCLATURE OR DESCRIPTION	MATERIAL SPECIFICATION
22	1		2-6-0925 (1.)		2-6-0925-23	PATTERN, WATER BOTTLE MAIN RIGHT	PARA 3.12.7.2 CLOTH, NYLON, 500D
23	1		2-6-0925 (1.)		2-6-0925-22	PATTERN, WATER BOTTLE BOTTOM, LEFT	PARA 3.12.7.2 CLOTH, NYLON, 500D
24	4		2-6-0925 (1.)		2-6-0925-45	PATTERN, SIDE OUTER (2.) BUCKLE TAB, WEBBING, 1", CUT LENGTH 3 1/2"	PARA 3.12.4.1
25	2		2-6-0925 (1.)		2-6-0925-36	PATTERN, SPEED ZIPPER COMPARTMENT TRIANGLE	PARA 3.12.7.2 CLOTH, NYLON, 500D
26	2		2-6-0925 (1.)		2-6-0925-37	PATTERN, SUPERMAN (D-RING)	PARA 3.12.7.2 CLOTH, NYLON, 500D
27	1		2-6-0925 (1.)		2-6-0925-11	PATTERN, SHROUD	PARA 3.12.7.3 CLOTH, NYLON
28	1		2-6-0925 (1.)		2-6-0925-12	PATTERN, SHROUD GROMMET STRIP	PARA 3.12.7.2 CLOTH, NYLON, 500D

PARTS LIST	U.S. ARMY NATICK SOLDIER RESEARCH, DEVELOPMENT & ENGINEERING CENTER KANSAS STREET, NATICK MA. 01760-5056	CAGE 81337	PL2-6-0894	REVISION LTR – DATE 11-05-18
LIST TITLE	USMC MAIN PACK ASSEMBLY		APPROVED T. S. / T. S.	REV AUTH NO. DR-S-010-11 / SHEET 6 OF ____ SHEETS

FIND NO.	QTY RQD -1	CAGE	DRAWING OR DOCUMENT NUMBER	DWG SIZE	PART OR IDENTIFYING NUMBER	NOMENCLATURE OR DESCRIPTION	MATERIAL SPECIFICATION
29	1	81337	2-6-0894	E	2-6-0894-5	SHROUD ASSEMBLY	
30	3	81337	2-6-0894	E	2-6-0894-6	HANDLE ASSEMBLY	
31	1	81337	2-6-0894	E	2-6-0894-7	COLLAR ASSEMBLY	
32	1	81337	2-6-0894	E	2-6-0894-8	SUPERMAN (D-RING), ASSEMBLY	
33	1	81337	2-6-0894	E	2-6-0894-9	SPEED ZIPPER COMPARTMENT TRIANGLE ASSEMBLY	
34	3		2-6-0925 1.		2-6-0925-40	PATTERN, HANDLE, 2. WEBBING, 2", CUT LENGTH 10"	PARA 3.12.4.3
35	2		1.			WEBBING, 1.5", 2. CUT LENGTH 10"	PARA 3.12.4.2
36	6		1.			WEBBING, 1" WIDE, 2. CUT LENGTH 18"	PARA 3.12.4.1
37	12		1.			WEBBING, 1" WIDE, 2. CUT LENGTH 12 1/2"	PARA 3.12.4.1
38	2		2-6-0925 1.		2-6-0925-43	PATTERN, BACK VERTICAL 2. WEBBING, WEBBING, 1", CUT LENGTH 22"	PARA 3.12.4.1
39	4		2-6-0925 1.		2-6-0925-41	PATTERN, BACK MALE 2. BUCKLE WEBBING, WEBBING, 1", CUT LENGTH 27"	PARA 3.12.4.1

PARTS LIST	U.S. ARMY NATICK SOLDIER RESEARCH, DEVELOPMENT & ENGINEERING CENTER KANSAS STREET, NATICK MA. 01760-5056	CAGE 81337	PL2-6-0894	REVISION LTR – DATE 11-05-18
LIST TITLE	USMC MAIN PACK ASSEMBLY		APPROVED T. S. / T. S.	REV AUTH NO. DR-S-010-11 / SHEET 7 OF ____ SHEETS

FIND NO.	QTY RQD -1	CAGE	DRAWING OR DOCUMENT NUMBER	DWG SIZE	PART OR IDENTIFYING NUMBER	NOMENCLATURE OR DESCRIPTION	MATERIAL SPECIFICATION
40	1		2-6-0925 1.		2-6-0925-50	PATTERN, RADIO FRONT 2. BUCKLE, WEBBING, 1", CUT LENGTH 7"	PARA 3.12.4.1
41	2		2-6-0925 1.		2-6-0925-44	PATTERN, BACK HORIZONTAL 2. RING STRAP, WEBBING, 1", CUT LENGTH 12 1/2"	PARA 3.12.4.1
42	4		2-6-0925 1.		2-6-0925-42	PATTERN, BACKSIDE WEBBING, WEBBING, 1", CUT LENGTH 5"	PARA 3.12.4.1
43	4		2-6-0925 1.		2-6-0925-38	WEBBING, 1", 2. CUT LENGTH 3 1/2"	PARA 3.12.4.1
44	2		1.			WEBBING, 1", 2. CUT LENGTH 16"	PARA 3.12.4.1
45	10		1.			WEBBING, ELASTIC, 1", 2. CUT LENGTH 9"	PARA 3.12.5.1
46	12		1.			BUCKLE, SIDE-RELEASE, FEMALE, 1.0 INCH	PARA 3.12.1.2.16
47	2		1.			D-RING, METAL	PARA 3.12.1.3.2
48	4		1.			RING, OVAL	PARA 3.12.1.8.1
49	1		1.			FASTENER, SLIDE, 2. CUT LENGTH 17"	PARA 3.12.9.3
50	1		1.			FASTENER, SLIDE, 2. CUT LENGTH 13"	PARA 3.12.9.8
51	1		1.			FASTENER, SLIDE, 2. CUT LENGTH 39"	PARA 3.12.9.4

PARTS LIST	U.S. ARMY NATICK SOLDIER RESEARCH, DEVELOPMENT & ENGINEERING CENTER KANSAS STREET, NATICK MA. 01760-5056	CAGE 81337	PL2-6-0894	REVISION LTR – DATE 11-05-18
LIST TITLE	USMC MAIN PACK ASSEMBLY		APPROVED T. S. / T. S.	REV AUTH NO. DR-S-010-11 / SHEET 8 OF ____ SHEETS

FIND NO.	QTY RQD -1	CAGE	DRAWING OR DOCUMENT NUMBER	DWG SIZE	PART OR IDENTIFYING NUMBER	NOMENCLATURE OR DESCRIPTION	MATERIAL SPECIFICATION
52	1		1.			BUCKLE, LOCK, 1"	PARA 3.12.1.9.7
53	AR		1.			TAPE, 1" WIDE (BINDING)	PARA 3.12.4.5
54	2		1.			CORD LOCK, ROUND	PARA 3.12.1.1.2
55	2		1.			CORD, ROUND, 2. CUT LENGTH 58"	PARA 3.12.10.3
56	7		1.			GROMMET	PARA 3.12.1.6.1
57	AR		1.			THREAD, SIZE E	PARA 3.12.8.2
58	AR		1.			THREAD, SIZE F	PARA 3.12.8.1
59	8		2-6-0925 1.		2-6-0925-55	PATTERN, HOOK AND LOOP TEMPLATE	PARA 3.12.6
60	1	81337	2-6-0904	C	2-6-0904-1	IDENTIFICATION & INSTRUCTION LABEL	PARA 3.25
61	1		2-6-0925 1.		2-6-0925-28	PATTERN, RADIO POCKET RIGHT	PARA 3.12.7.2 CLOTH, NYLON, 500D
62	1		2-6-0925 1.		2-6-0925-29	PATTERN, RADIO POCKET LEFT	PARA 3.12.7.2 CLOTH, NYLON, 500D

PARTS LIST	U.S. ARMY NATICK SOLDIER RESEARCH, DEVELOPMENT & ENGINEERING CENTER KANSAS STREET, NATICK MA. 01760-5056	CAGE 81337	PL2-6-0894	REVISION LTR – DATE 11-05-18
LIST TITLE	USMC MAIN PACK ASSEMBLY		APPROVED T. S. / T. S.	REV AUTH NO. DR-S-010-11 / SHEET 9 OF ____ SHEETS

FIND NO.	QTY RQD -1	CAGE	DRAWING OR DOCUMENT NUMBER	DWG SIZE	PART OR IDENTIFYING NUMBER	NOMENCLATURE OR DESCRIPTION	MATERIAL SPECIFICATION
63	1		2-6-0925 1.		2-6-0925-34	PATTERN, COLLAR, INNER	PARA 3.12.7.2 CLOTH, NYLON, 500D
64	1		2-6-0925 1.		2-6-0925-10	PATTERN, INNER BOTTOM	PARA 3.12.7.2 CLOTH, NYLON, 500D
65	1		2-6-0925 1.		2-6-0925-51	PATTERN, RADIO POCKET 2. CROSS STRAP, WEBBING, 1", CUT LENGTH 5"	PARA 3.12.4.1
66	2		2-6-0925 1.		2-6-0925-39	PATTERN, FRONT MALE 2. BUCKLE, WEBBING, 1", CUT LENGTH 26"	PARA 3.12.4.1
67	8		1.			BUCKLE, SIDE-RELEASE, MALE, 1.0 INCH	PARA 3.12.1.2.10
68	1		2-6-0925 1.		2-6-0925-48	PATTERN, FRONT INSIDE 2. WEBBING, 1", CUT LENGTH 27"	PARA 3.12.4.1
69	1		2-6-0925 1.		2-6-0925-49	PATTERN, RADIO STRAP 2. INSIDE FEMALE BUCKLE, WEBBING, 1", CUT LENGTH 5"	PARA 3.12.4.1

PARTS LIST	U.S. ARMY NATICK SOLDIER RESEARCH, DEVELOPMENT & ENGINEERING CENTER KANSAS STREET, NATICK MA. 01760-5056	CAGE 81337	PL2-6-0894	REVISION LTR – DATE 11-05-18
LIST TITLE	USMC MAIN PACK ASSEMBLY		APPROVED T. S. / T. S.	REV AUTH NO. DR-S-010-11 / SHEET 10 OF ____ SHEETS

FIND NO.	QTY RQD -1	CAGE	DRAWING OR DOCUMENT NUMBER	DWG SIZE	PART OR IDENTIFYING NUMBER	NOMENCLATURE OR DESCRIPTION	MATERIAL SPECIFICATION
70	1		2-6-0925 1.		2-6-0925-53	PATTERN, SPEED ZIPPER 2. COMPARTMENT MALE BUCKLE, WEBBING, 1", CUT LENGTH 20"	PARA 3.12.4.1
71	1		2-6-0925 1.		2-6-0925-54	PATTERN, SUPERMAN 2. (D-RING) WEBBING, 1", CUT LENGTH 5"	PARA 3.12.4.1
72	1		2-6-0925 1.		2-6-0925-52	PATTERN, DIVIDER 2. FEMALE BUCKLE WEBBING, 1", CUT LENGTH 3 1/2"	PARA 3.12.4.1
73	1		2-6-0925 1.		2-6-0925-21	PATTERN, WATER BOTTLE BOTTOM (RIGHT)	PARA 3.12.7.2 CLOTH, NYLON, 500D
74	2	81337	2-6-0926 1.	E	2-6-0926-50	WEBBING, 1" WIDE, 2. CUT LENGTH 34"	PARA 3.12.4.1
75	2		1.			CORD, ROUND, 2. CUT LENGTH 9"	PARA 3.12.10.3

NOTES:

1. WORKMANSHIP, CONSTRUCTION, STITCHING AND QUALITY ASSURANCE PROVISIONS SHALL CONFORM TO PURCHASE DESCRIPTION, FAMILY OF IMPROVED. LOAD BEARING EQUIPMENT DATED 10 MAY 2011.
2. UNLESS OTHERWISE SPECIFIED ALL FOLDS, HEMS, AND TURN UNDERS SHALL BE 3/8".
3. ALL STITCHING SHALL BE BACKSTITCHED NOT LESS THAN 1/2 INCH UNLESS TURNED UNDER BY A HEM OR HELD BY OTHER STITCHING.
4. ALL STITCHING TO BE 1/8 INCH FROM EDGE OR APART, UNLESS OTHERWISE SPECIFIED.
5. UNLESS OTHERWISE SPECIFIED, TOLERANCES SHALL BE AS FOLLOWS:
   1/8 INCH OR MORE BUT LESS THAN 2 INCHES --- ±1/16
   2 INCHES OR MORE BUT LESS THAN 10 INCHES -- ±1/8
   10 INCHES OR MORE BUT LESS THAN 36 INCHES - ±1/4
   36 INCHES OR MORE ---------- ±3/8
6. SEAR ALL ENDS OF WEBBING AND TAPE TO PREVENT FRAYING. AVOID FORMING SHARP EDGES.
7. FN 74, ATTACHING STRAP, SHOWN DETACHED FROM MAIN PACK FOR CLARITY. FOR ATTACHMENT CONFIGURATION, REFER TO TECHNICAL MANUAL XXXX.
8. LOCATE FN 60, LABEL, APPROXIMATELY AS SHOWN.

REVISIONS

ZONE	LTR	DESCRIPTION	PROJ DFCR	APVD	DATE
	-	INITIAL RELEASE PER DR-S-010-11	T. S.	T. S.	11-05-20

THIS DRAWING HAS BEEN GENERATED AND IS MAINTAINED BY A CAD SYSTEM. CHANGES SHALL ONLY BE INCORPORATED AS DIRECTED BY THE DESIGN ACTIVITY.

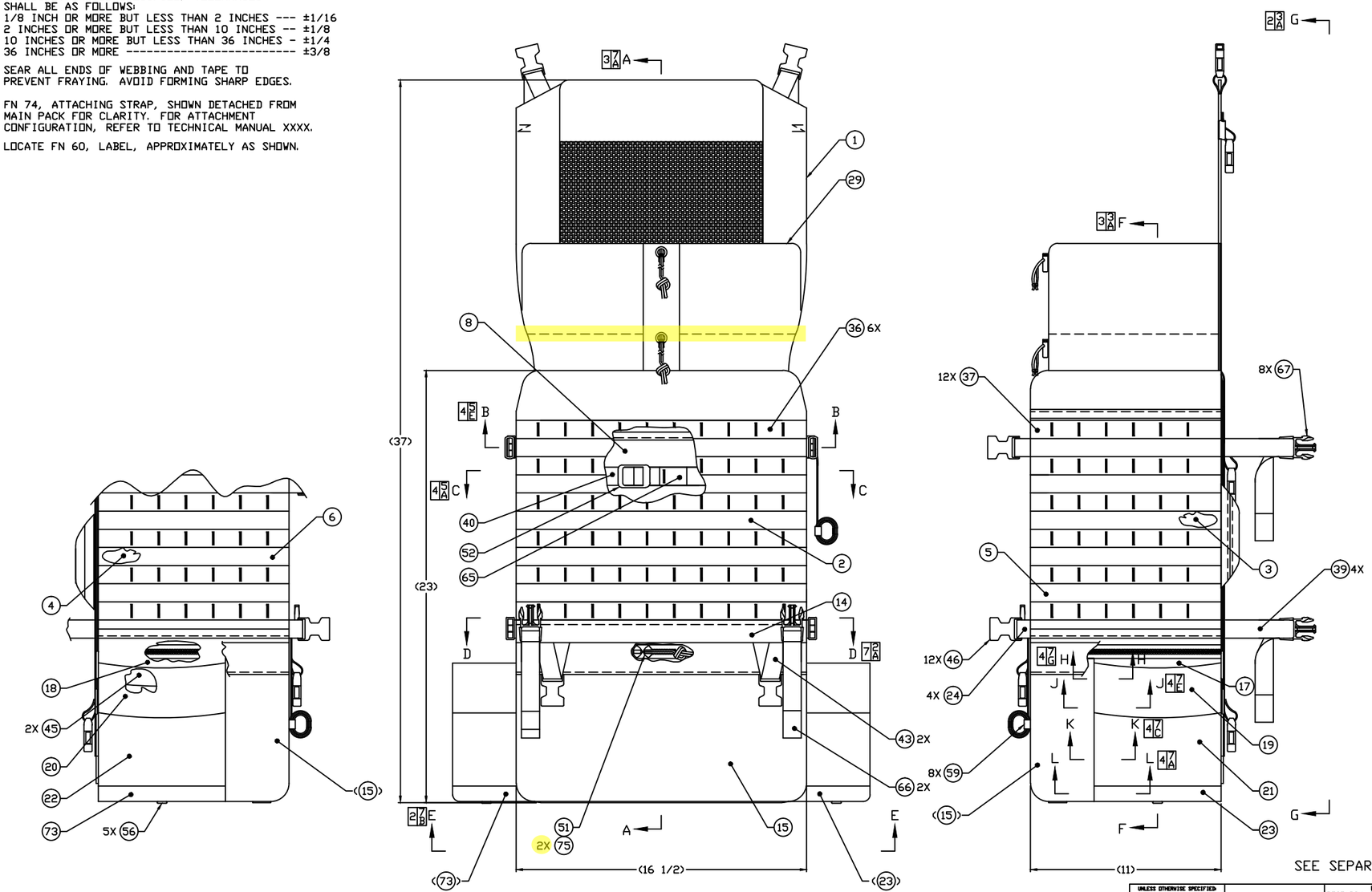

SEE SEPARATE PARTS LIST

DISTRIBUTION STATEMENT A
THIS DOCUMENT IS APPROVED FOR PUBLIC RELEASE; DISTRIBUTION IS UNLIMITED.

REVISION STATUS OF SHEETS							
SHEET	1	2	3	4	5	6	7
REVISION	-	-	-	-	-	-	-

INTERPRET THIS DRAWING IN ACCORDANCE WITH ASME Y14.100

UNLESS OTHERWISE SPECIFIED DIMENSIONS ARE IN INCHES
TOLERANCES:
ANGLES ±
FRACTIONS ±
2 PLACE DIM ±
3 PLACE DIM ±

APPLICATION	
2-6-0894	2-6-0894
NEXT ASSY	USED ON

DATE 11-05-01
DRAWN BY E. TAMSKY
CHECKED F. W. K.
PROJ DFCR T. SCOTT
APPROVED K. RYAN
APPROVAL DESIGN ACTIVITY J. CONNOR
APPLICABLE SPEC PD-XX-XXXX

U.S. ARMY NATICK SOLDIER RESEARCH, DEVELOPMENT & ENGINEERING CENTER
KANSAS STREET, NATICK MA. 01760-5056

USMC MAIN PACK ASSEMBLY

SIZE	CAGE	DRAWING NO.
E	81337	2-6-0894

SCALE: 1/2 UNIT WT. SHEET 1 OF 7

G:\Drafting1\marine corp pack\2-6-0894S1.dwg

REVISIONS					
ZONE	LTR	DESCRIPTION	PROJ DFCR	APVD	DATE
	-	INITIAL RELEASE PER DR-S-010-11	T. S.	T. S.	11-05-20

THIS DRAWING HAS BEEN GENERATED AND IS MAINTAINED BY A CAD SYSTEM. CHANGES SHALL ONLY BE INCORPORATED AS DIRECTED BY THE DESIGN ACTIVITY.

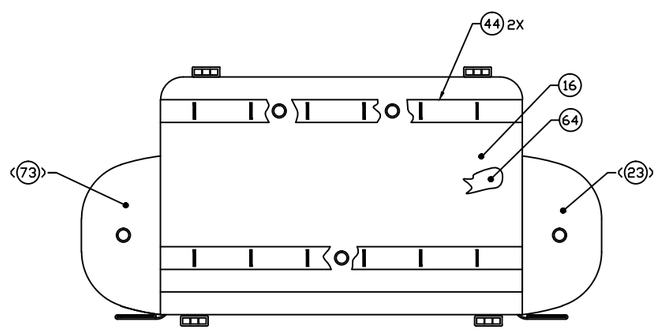

VIEW E-E 1 6 B

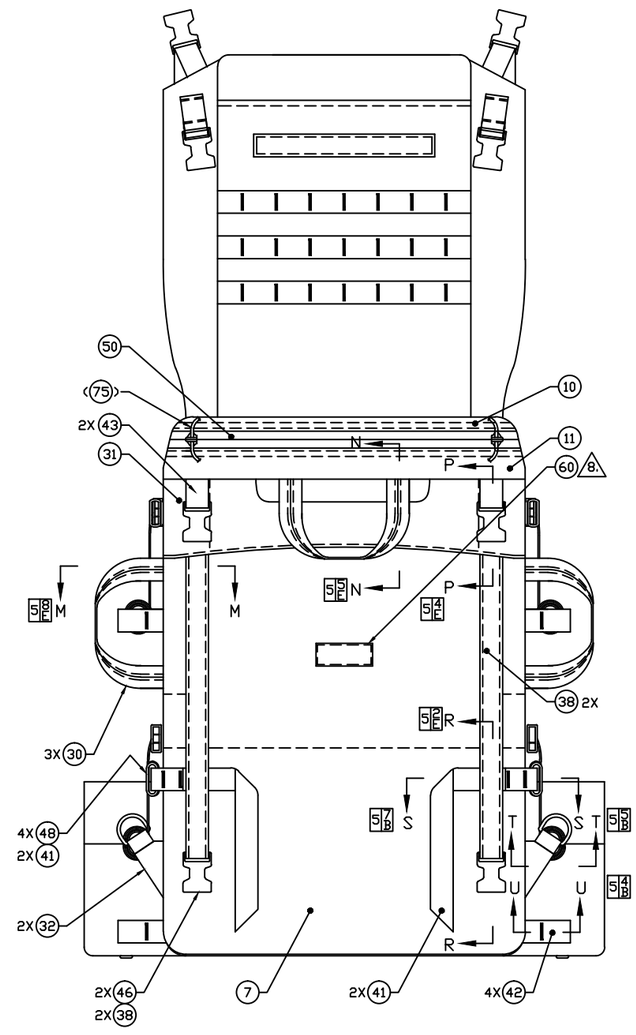

VIEW G-G 1 2 G

DISTRIBUTION STATEMENT A
THIS DOCUMENT IS APPROVED FOR PUBLIC RELEASE; DISTRIBUTION IS UNLIMITED.

SIZE	CAGE	DRAWING NO.
E	81337	2-6-0894
SCALE 1/2	UNIT WT.	SHEET 2

G:\Drafting1\marine corp pack\2-6-0894S2.dwg

REVISIONS					
ZONE	LTR	DESCRIPTION	PROJ DFCR	APVD	DATE
	-	INITIAL RELEASE PER DR-S-010-11	T. S.	X. X.	11-05-17

THIS DRAWING HAS BEEN GENERATED AND IS MAINTAINED BY A CAD SYSTEM. CHANGES SHALL ONLY BE INCORPORATED AS DIRECTED BY THE DESIGN ACTIVITY.

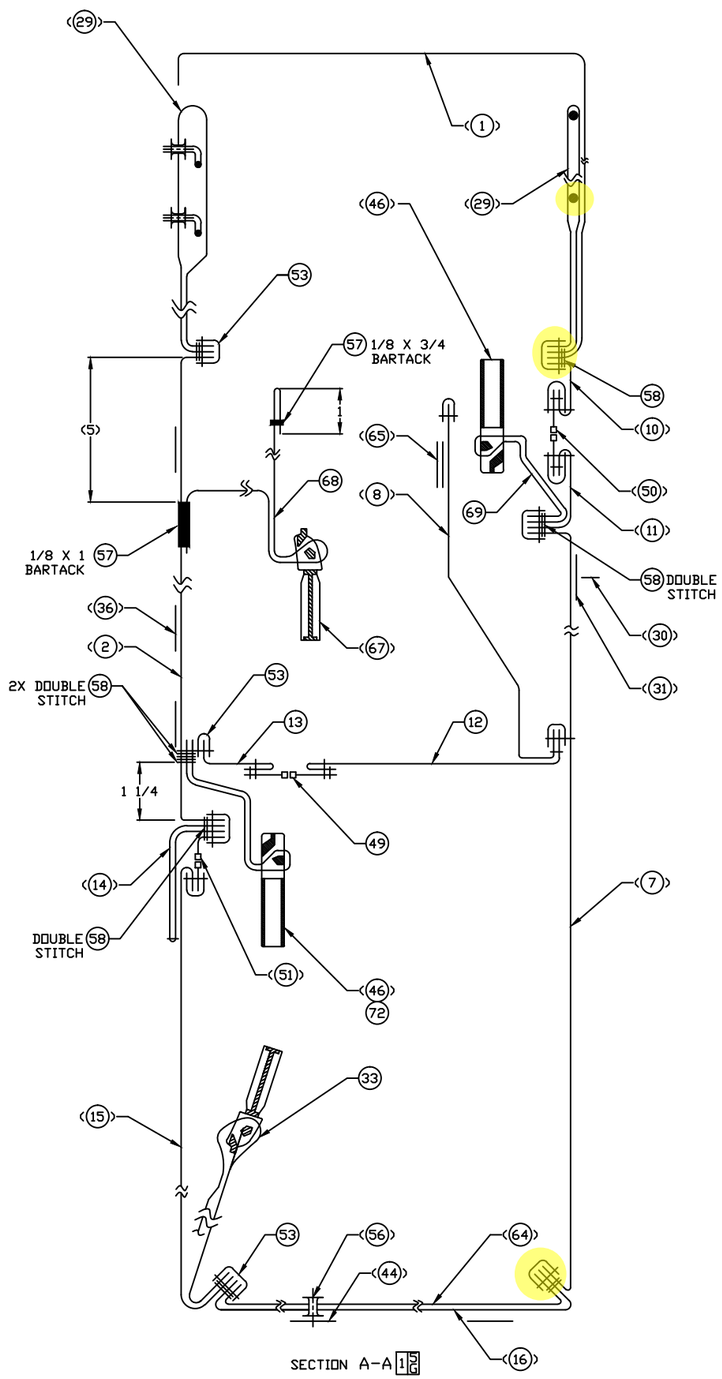

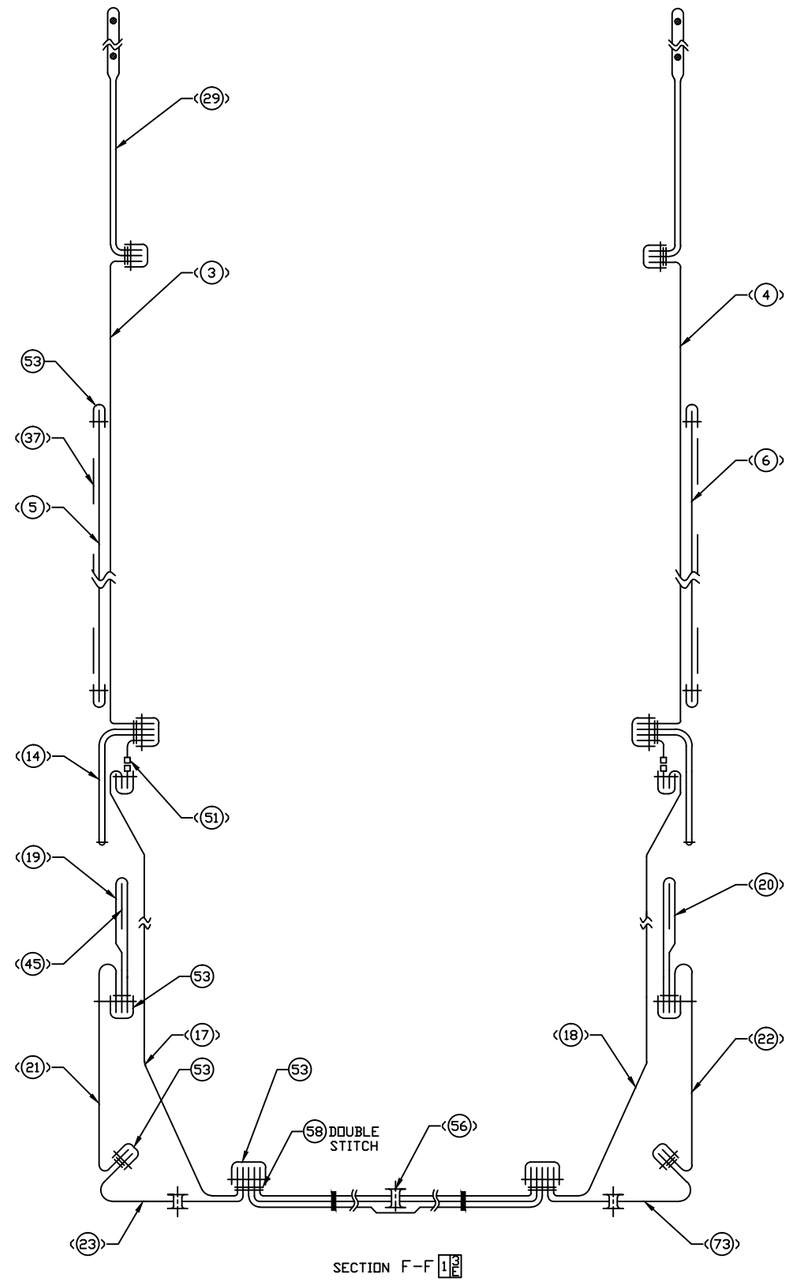

DISTRIBUTION STATEMENT A
THIS DOCUMENT IS APPROVED FOR PUBLIC RELEASE; DISTRIBUTION IS UNLIMITED.

SIZE	CAGE	DRAWING NO.
E	81337	2-6-0894
SCALE 1:1	UNIT WT.	SHEET 3

G:\Drafting1\marine corp pack\2-6-0894S3.dwg

REVISIONS					
ZONE	LTR	DESCRIPTION	PROJ OFCR	APVD	DATE
	-	INITIAL RELEASE PER DR-S-010-11	T. S.	X. X.	11-05-17

THIS DRAWING HAS BEEN GENERATED AND IS MAINTAINED BY A CAD SYSTEM. CHANGES SHALL ONLY BE INCORPORATED AS DIRECTED BY THE DESIGN ACTIVITY.

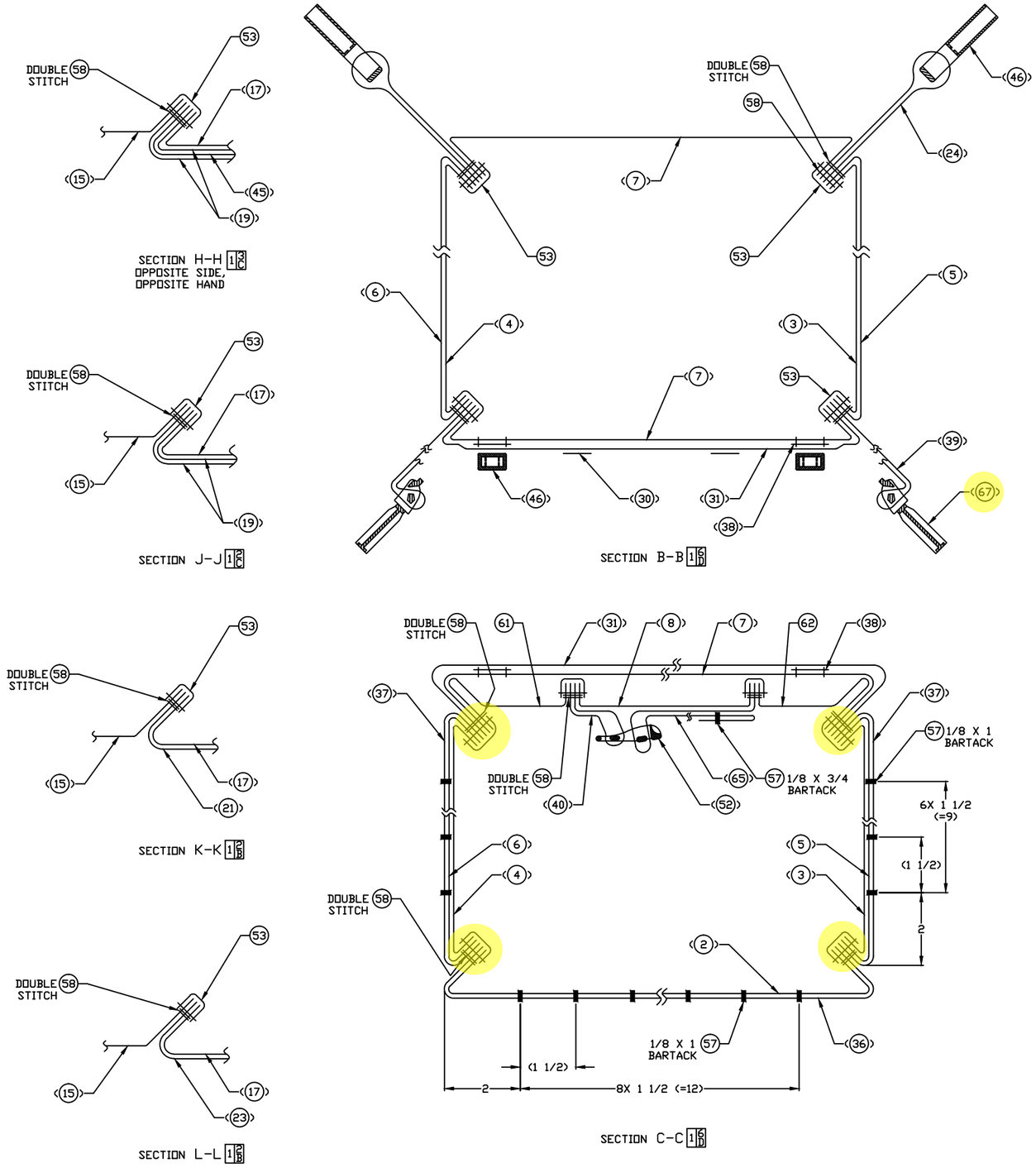

DISTRIBUTION STATEMENT A
THIS DOCUMENT IS APPROVED FOR PUBLIC RELEASE; DISTRIBUTION IS UNLIMITED.

SIZE	CAGE	DRAWING NO.
E	81337	2-6-0894
SCALE 1:1	UNIT WT.	SHEET 4

2-6-0894 SHT 4

G:\Drafting1\marine corp pack\2-6-0894S4.dwg

REVISIONS					
ZONE	LTR	DESCRIPTION	PROJ DFCR	APVD	DATE
	-	INITIAL RELEASE PER DR-S-010-11	T. S.	X. X.	11-05-17

THIS DRAWING HAS BEEN GENERATED AND IS MAINTAINED BY A CAD SYSTEM. CHANGES SHALL ONLY BE INCORPORATED AS DIRECTED BY THE DESIGN ACTIVITY.

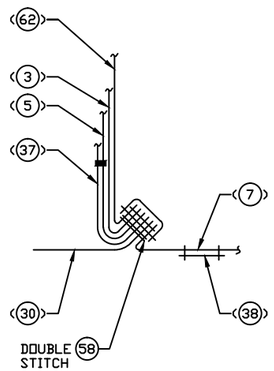

SECTION M-M 2 3 D

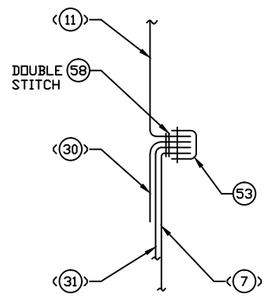

SECTION N-N 2 3 D

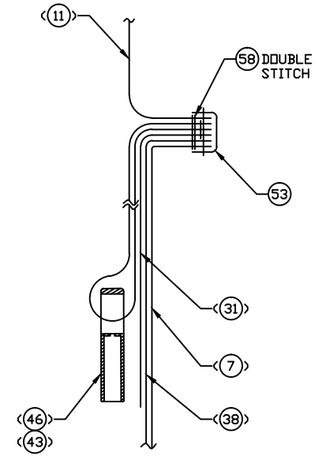

SECTION P-P 2 3 D

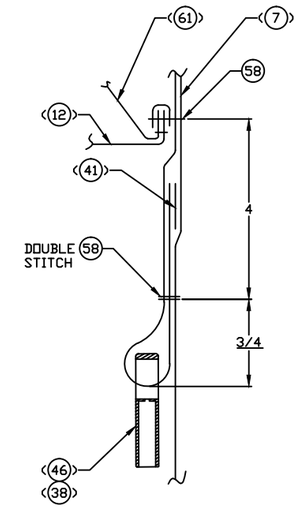

SECTION R-R 2 3 C

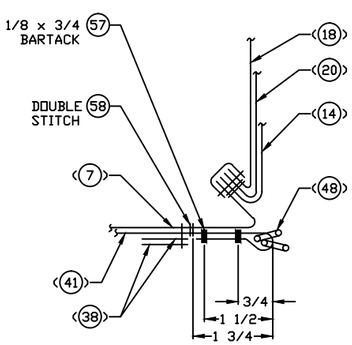

SECTION S-S 2 3 C

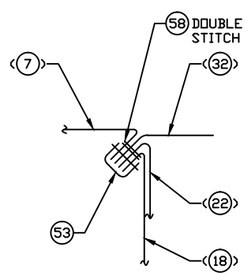

SECTION T-T 2 3 C

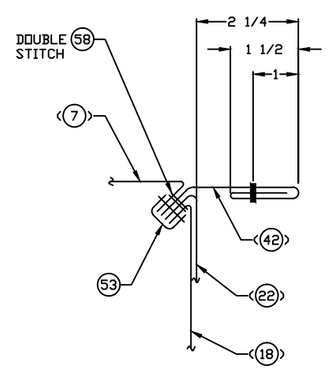

SECTION U-U 2 3 B
2X AS SHOWN,
2X OPPOSITE HAND

DISTRIBUTION STATEMENT A
THIS DOCUMENT IS APPROVED FOR PUBLIC RELEASE; DISTRIBUTION IS UNLIMITED.

SIZE	CAGE	DRAWING NO.
E	81337	2-6-0894
SCALE 1:1	UNIT WT.	SHEET 5

G:\Drafting1\marine corp pack\2-6-0894S5.dwg

REVISIONS					
ZONE	LTR	DESCRIPTION	PROJ DFCR	APVD	DATE
	-	INITIAL RELEASE PER DR-S-010-11	T. S.	X. X.	11-05-17

THIS DRAWING HAS BEEN GENERATED AND IS MAINTAINED BY A CAD SYSTEM. CHANGES SHALL ONLY BE INCORPORATED AS DIRECTED BY THE DESIGN ACTIVITY.

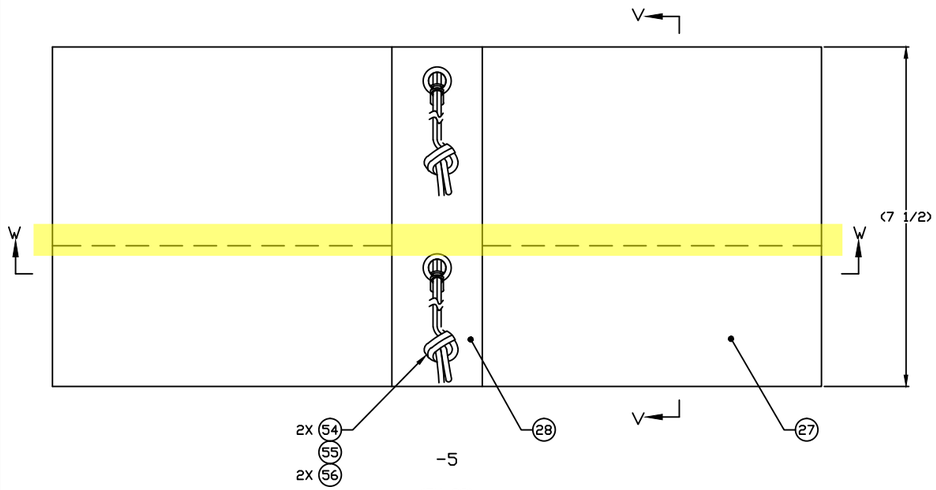

(FN 29)
SHROUD ASSEMBLY

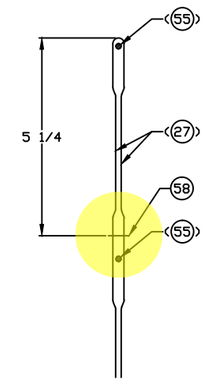

SECTION V-V

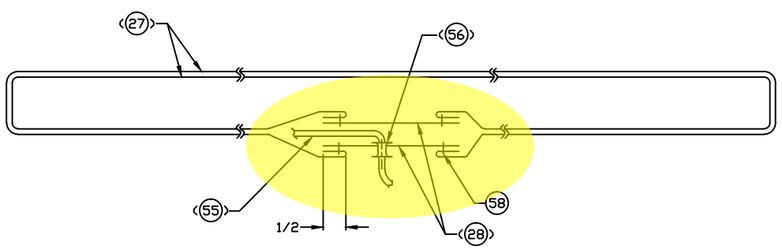

SECTION W-W

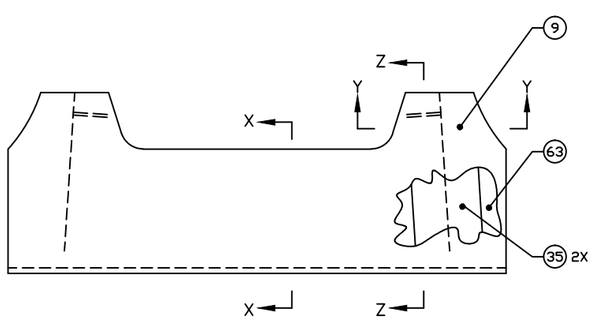

(FN 31)
COLLAR ASSEMBLY

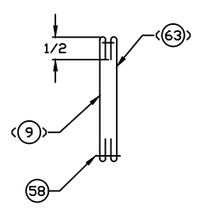

SECTION X-X

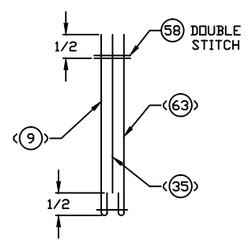

SECTION Z-Z

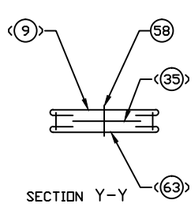

SECTION Y-Y

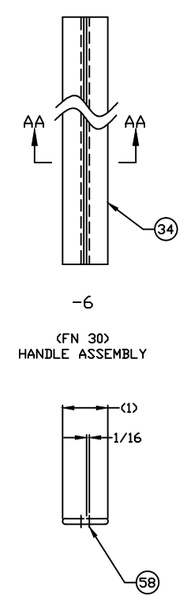

(FN 30)
HANDLE ASSEMBLY

SECTION AA-AA

DISTRIBUTION STATEMENT A
THIS DOCUMENT IS APPROVED FOR PUBLIC RELEASE; DISTRIBUTION IS UNLIMITED.

SIZE	CAGE	DRAWING NO.
E	81337	2-6-0894
SCALE 1:1	UNIT WT.	SHEET 6

2-6-0894 SHT 6

G:\Drafting1\marine corp pack\2-6-0894S6.dwg

REVISIONS					
ZONE	LTR	DESCRIPTION	PROJ DFCR	APVD	DATE
	-	INITIAL RELEASE PER DR-S-010-11	T. S.	X. X.	11-05-17

THIS DRAWING HAS BEEN GENERATED AND IS MAINTAINED BY A CAD SYSTEM. CHANGES SHALL ONLY BE INCORPORATED AS DIRECTED BY THE DESIGN ACTIVITY.

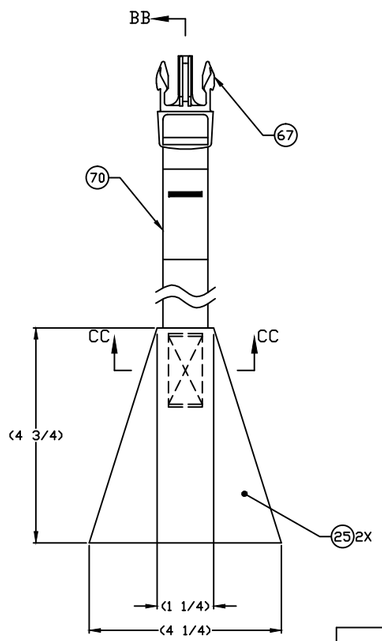

-9

(FN 33)
SPEED ZIPPER
COMPARTMENT ASSEMBLY

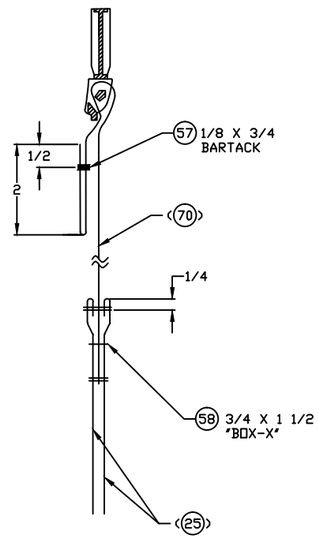

SECTION BB-BB

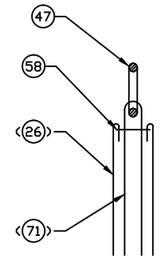

SECTION DD-DD
ROTATED 38° CW

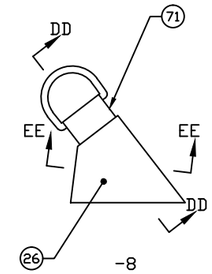

-8

2X (FN 32)
SUPERMAN (D-RING) ASSEMBLY

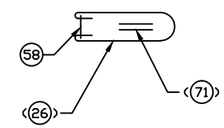

SECTION EE-EE
ROTATED 7° CCW

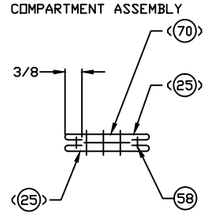

SECTION CC-CC

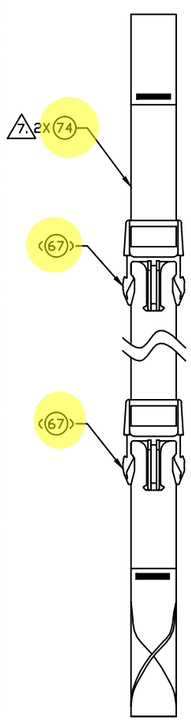

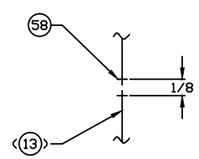

SECTION FF-FF
SCALE: 2/1

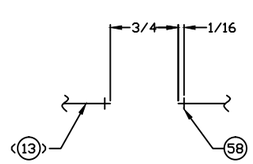

SECTION GG-GG
SCALE: 2/1

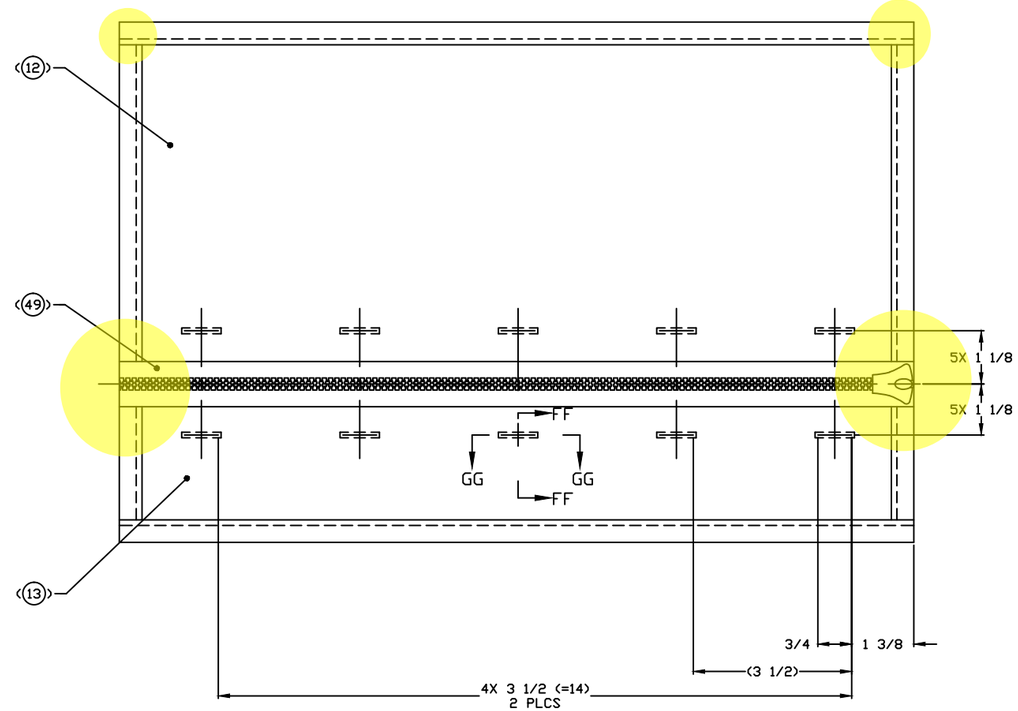

VIEW D-D 1 4 C
SHOWING BUTTON HOLES

DISTRIBUTION STATEMENT A
THIS DOCUMENT IS APPROVED FOR PUBLIC RELEASE; DISTRIBUTION IS UNLIMITED.

SIZE	CAGE	DRAWING NO.
E	81337	2-6-0894
SCALE 1:1	UNIT WT.	SHEET 7

2-6-0894 SH 7

G:\Drafting1\marine corp pack\2-6-0894S7.dwg