REVISIONS				
REV	DESCRIPTION	PROJ OFCR	APVD	DATE
–	INITIAL RELEASE PER DR-S-010-11	T.S.	T.S.	11-05-20

THIS DRAWING HAS BEEN GENERATED AND IS MAINTAINED BY A CAD SYSTEM. CHANGES SHALL ONLY BE INCORPORATED AS DIRECTED BY THE DESIGN ACTIVITY.

1. REFER TO PURCHASE DESCRIPTION, FAMILY OF IMPROVED LOAD BEARING EQUIPMENT, DATED 10 MAY 2011.

2. CUT LENGTHS ARE FOR REFERENCE ONLY

DISTRIBUTION STATEMENT A

THIS DOCUMENT IS APPROVED FOR PUBLIC RELEASE; DISTRIBUTION IS UNLIMITED.

REV LEVEL	–	–	–													
SHEET NO.	1	2	3													

REVISION STATUS OF SHEETS

INTERPRET THIS DRAWING IN ACCORDANCE WITH ASME Y14.100

UNLESS OTHERWISE SPECIFIED:
DIMENSIONS ARE IN INCHES
TOLERANCES:
ANGLES ±
FRACTIONS ±
2 PLACE DIM ± NA
3 PLACE DIM ±

DATE	11-05-20
DRAWN BY	C. KRIKORIAN
CHECKED	K. VARNEY
PROJ OFCR	T. SCOTT
APPROVED	K. RYAN
APPROVAL DESIGN ACTIVITY	J. CONNOR
APPLICABLE SPEC	

U.S. ARMY NATICK SOLDIER RESEARCH, DEVELOPMENT & ENGINEERING CENTER
KANSAS STREET, NATICK MA. 01760-5056

HYDRATION CARRIER ASSEMBLY, USMC PACK

NEXT ASSY	USED ON
2-6-0894	2-6-0894

APPLICATION

SIZE	CAGE	DRAWING NO.
A	81337	PL2-6-0893

SCALE: NONE | UNIT WT. | SHEET 1 OF 8

G:\Drafting1\marine corp pack\2-6-0893PLS1.dwg

PARTS LIST	U.S. ARMY NATICK SOLDIER RESEARCH, DEVELOPMENT & ENGINEERING CENTER KANSAS STREET, NATICK MA. 01760-5056	CAGE 81337	PL2-6-0893	REVISION LTR – DATE 11/05/20
LIST TITLE HYDRATION CARRIER ASSEMBLY, USMC PACK			APPROVED T. S. T. S.	REV AUTH NO. DR-S-010-11 / SHEET 2 OF ____ SHEETS

FIND NO.	QTY RQD -1	CAGE	DRAWING OR DOCUMENT NUMBER	DWG SIZE	PART OR IDENTIFYING NUMBER	NOMENCLATURE OR DESCRIPTION	MATERIAL SPECIFICATION
1	1		2-6-0920 1.		2-6-0920-8	PATTERN, FRONT FLAP, OUTER CENTER	PARA 3.12.7.2 CLOTH, NYLON, 500D
2	1		2-6-0920 1.		2-6-0920-14	PATTERN, FRONT FLAP, INSIDE CENTER	PARA 3.12.7.4 CLOTH, NYLON
3	1		2-6-0920 1.		2-6-0920-7	PATTERN, FRONT FLAP, OUTER LEFT	PARA 3.12.7.2 CLOTH, NYLON, 500D
4	1		2-6-0920 1.		2-6-0920-10	PATTERN, FRONT FLAP, ZIP RIGHT TOP	PARA 3.12.7.2 CLOTH, NYLON, 500D
5	1		2-6-0920 1.		2-6-0920-11	PATTERN, FRONT FLAP, ZIP RIGHT BOTTOM	PARA 3.12.7.2 CLOTH, NYLON, 500D
6	2		2-6-0920 1.		2-6-0920-13	PATTERN, FRONT FLAP, GUSSET	PARA 3.12.7.2 CLOTH, NYLON, 500D
7	2		2-6-0920 1.		2-6-0920-15	PATTERN, FRONT FLAP, INNER SIDE	PARA 3.12.7.2 CLOTH, NYLON, 500D
8	1		2-6-0920 1.		2-6-0920-12	PATTERN, FRONT FLAP, RIGHT ZIP END	PARA 3.12.7.2 CLOTH, NYLON, 500D
9	1		2-6-0920 1.		2-6-0920-9	PATTERN, FRONT FLAP, OUTER BOTTOM	PARA 3.12.7.2 CLOTH, NYLON, 500D
10	1		2-6-0920 1.		2-6-0920-42	PATTERN, TOP HANDLE	PARA 3.12.4.2

PARTS LIST	U.S. ARMY NATICK SOLDIER RESEARCH, DEVELOPMENT & ENGINEERING CENTER KANSAS STREET, NATICK MA. 01760-5056	CAGE 81337	PL2-6-0893	REVISION LTR – DATE 11/05/20
LIST TITLE HYDRATION CARRIER ASSEMBLY, USMC PACK			APPROVED T. S. T. S.	REV AUTH NO. DR-S-010-11 / SHEET 3 OF ____ SHEETS

FIND NO.	QTY RQD –1	CAGE	DRAWING OR DOCUMENT NUMBER	DWG SIZE	PART OR IDENTIFYING NUMBER	NOMENCLATURE OR DESCRIPTION	MATERIAL SPECIFICATION
11	1		2-6-0920 1.		2-6-0920-43	WEBBING, 1" WIDE, CUT LENGTH 3" 2.	PARA 3.12.4.1
12	1		1.			FASTENER TAPE, LOOP, CUT LENGTH 5 1/2" 2.	PARA 3.12.6
13	1		1.			SIDE RELEASE BUCKLE, FEMALE	PARA 3.12.1.2.21
14	1		1.			SLIDE FASTENER, CUT LENGTH 9" 2.	PARA 3.12.9.2
15	1		1.			SLIDE FASTENER, CUT LENGTH 9 1/2" 2.	PARA 3.12.9.2
16	AR		1.			TAPE, BINDING, 1"	PARA 3.12.4.5
17	AR		1.			THREAD, SIZE E	PARA 3.12.8.2
18	AR		1.			THREAD, SIZE F	PARA 3.12.8.1
19	1		2-6-0893 1.		2-6-0893-5	HANDLE ASSEMBLY, WEBBING, 1 1/2" WIDE 2.	PARA 3.12.4.2
20	1		2-6-0893 1.		2-6-0893-6	LID ASSEMBLY	

PARTS LIST	U.S. ARMY NATICK SOLDIER RESEARCH, DEVELOPMENT & ENGINEERING CENTER KANSAS STREET, NATICK MA. 01760-5056	CAGE 81337	PL2-6-0893	REVISION LTR – DATE 11/05/20
LIST TITLE HYDRATION CARRIER ASSEMBLY, USMC PACK			APPROVED T. S. / T. S.	REV AUTH NO. DR-S-010-11 / SHEET 4 OF ____ SHEETS

FIND NO.	QTY RQD -1	CAGE	DRAWING OR DOCUMENT NUMBER	DWG SIZE	PART OR IDENTIFYING NUMBER	NOMENCLATURE OR DESCRIPTION	MATERIAL SPECIFICATION
21	1		2-6-0920 (1)		2-6-0920-23	PATTERN, FRONT BODY TOP	PARA 3.12.7.2 CLOTH, NYLON, 500D
22	1		2-6-0920 (1)		2-6-0920-25	PATTERN, FRONT BODY INSIDE	PARA 3.12.2.9 FOAM
23	1		2-6-0920 (1)		2-6-0920-2	PATTERN, BACK BODY SHELL	PARA 3.12.7.4 CLOTH, NYLON
24	1		2-6-0920 (1)		2-6-0920-5	PATTERN, BACK BODY INSERT	PARA 3.12.2.9 FOAM
25	1		2-6-0920 (1)		2-6-0920-6	PATTERN, BACK BODY LINER	PARA 3.12.7.4 CLOTH, NYLON
26	1		2-6-0920 (1)		2-6-0920-1	PATTERN, BACK SLEEVE POCKET	PARA 3.12.7.4 CLOTH, NYLON
27	1		2-6-0920 (1)		2-6-0920-33	PATTERN, LEFT SIDE BODY	PARA 3.12.7.2 CLOTH, NYLON, 500D
28	1		2-6-0920 (1)		2-6-0920-34	PATTERN, LEFT SIDE BODY INSERT	PARA 3.12.2.9 FOAM
29	1		2-6-0920 (1)		2-6-0920-35	PATTERN, LEFT SIDE BODY LINER	PARA 3.12.7.4 CLOTH, NYLON
30	1		2-6-0920 (1)		2-6-0920-17	PATTERN, FRONT MESH POCKET INSIDE	PARA 3.12.7.5 CLOTH, MESH

PARTS LIST	U.S. ARMY NATICK SOLDIER RESEARCH, DEVELOPMENT & ENGINEERING CENTER KANSAS STREET, NATICK MA. 01760-5056	CAGE 81337	PL2-6-0893	REVISION LTR – DATE 11/05/20
LIST TITLE HYDRATION CARRIER ASSEMBLY, USMC PACK			APPROVED T. S. / T. S.	REV AUTH NO. DR-S-010-11 / SHEET 5 OF ____ SHEETS

FIND NO.	QTY RQD -1	CAGE	DRAWING OR DOCUMENT NUMBER	DWG SIZE	PART OR IDENTIFYING NUMBER	NOMENCLATURE OR DESCRIPTION	MATERIAL SPECIFICATION
31	1		2-6-0920 (1.)		2-6-0920-27	PATTERN, RIGHT SIDE BODY SIDE	PARA 3.12.7.2 CLOTH, NYLON, 500D
32	1		2-6-0920 (1.)		2-6-0920-28	PATTERN, FRONT BODY INSERT	PARA 3.12.2.9 FOAM
33	1		2-6-0920 (1.)		2-6-0920-29	PATTERN, RIGHT SIDE BODY LINER	PARA 3.12.7.4 CLOTH, NYLON
34	1		2-6-0920 (1.)		2-6-0920-30	PATTERN, RIGHT SIDE BODY ZIPPER COVER	PARA 3.12.7.2 CLOTH, NYLON, 500D
35	1		2-6-0920 (1.)		2-6-0920-31	PATTERN, RIGHT SIDE ZIP END TOP	PARA 3.12.7.2 CLOTH, NYLON, 500D
36	1		2-6-0920 (1.)		2-6-0920-32	PATTERN, RIGHT SIDE ZIP END BOTTOM	PARA 3.12.7.2 CLOTH, NYLON, 500D
37	1		2-6-0920 (1.)		2-6-0920-24	PATTERN, FRONT BODY LOWER	PARA 3.12.7.2 CLOTH, NYLON, 500D
38	1		2-6-0920 (1.)		2-6-0920-46	WEBBING, 3/4" WIDE, CUT LENGTH 2 1/2" (2.)	PARA 3.12.4.6
39	2		2-6-0920 (1.)		2-6-0920-4	PATTERN, SHOULDER YOKE	PARA 3.12.7.2 CLOTH, NYLON, 500D
40	2		2-6-0920 (1.)		2-6-0920-36	WEBBING, 1 1/2" WIDE, CUT LENGTH 19" (2.)	PARA 3.12.4.2

PARTS LIST	U.S. ARMY NATICK SOLDIER RESEARCH, DEVELOPMENT & ENGINEERING CENTER KANSAS STREET, NATICK MA. 01760-5056	CAGE 81337	PL2-6-0893	REVISION LTR – DATE 11/05/20
LIST TITLE HYDRATION CARRIER ASSEMBLY, USMC PACK			APPROVED T. S. / T. S.	REV AUTH NO. DR-S-010-11 / SHEET 6 OF ____ SHEETS

FIND NO.	QTY RQD -1	CAGE	DRAWING OR DOCUMENT NUMBER	DWG SIZE	PART OR IDENTIFYING NUMBER	NOMENCLATURE OR DESCRIPTION	MATERIAL SPECIFICATION
41	2		2-6-0920 (1.)		2-6-0920-45	WEBBING, 1" WIDE, CUT LENGTH 2" (2.)	PARA 3.12.4.1
42	6		2-6-0920 (1.)		2-6-0920-38	WEBBING, 1" WIDE, CUT LENGTH 1 1/2" (2.)	PARA 3.12.4.1
43	2		2-6-0920 (1.)		2-6-0920-39	WEBBING, 1" WIDE, CUT LENGTH 22" (2.)	PARA 3.12.4.1
44	1		2-6-0920 (1.)		2-6-0920-47	WEBBING, ELASTIC 3/4" WIDE, CUT LENGTH 5" (2.)	PARA 3.12.5.6
45	1		2-6-0920 (1.)		2-6-0920-40	WEBBING, 3/4" WIDE, CUT LENGTH 5" (2.)	PARA 3.12.4.6
46	1		2-6-0920 (1.)		2-6-0920-3	PATTERN, TUBE OPENING FACING	PARA 3.12.7.4 CLOTH, NYLON
47	1		2-6-0920 (1.)		2-6-0920-41	WEBBING, 3/4" WIDE, CUT LENGTH 12" (2.)	PARA 3.12.4.6
48	2		2-6-0920 (1.)		2-6-0920-37	WEBBING, 1" WIDE, CUT LENGTH 11" (2.)	PARA 3.12.4.1
49	1		2-6-0920 (1.)		2-6-0920-26	PATTERN, FRONT BODY LINER	PARA 3.12.7.4 CLOTH, NYLON
50	1		(1.)			HOOK, PLASTIC	PARA 3.12.1.9.11

G:\Drafting1\marine corp pack\2-6-0893PLS6.dwg

PARTS LIST	U.S. ARMY NATICK SOLDIER RESEARCH, DEVELOPMENT & ENGINEERING CENTER KANSAS STREET, NATICK MA. 01760-5056	CAGE 81337	PL2-6-0893	REVISION LTR – DATE 11/05/20
LIST TITLE HYDRATION CARRIER ASSEMBLY, USMC PACK			APPROVED T. S. T. S.	REV AUTH NO. DR-S-010-11 / SHEET 7 OF ____ SHEETS

FIND NO.	QTY RQD -1	CAGE	DRAWING OR DOCUMENT NUMBER	DWG SIZE	PART OR IDENTIFYING NUMBER	NOMENCLATURE OR DESCRIPTION	MATERIAL SPECIFICATION
51	1		1.			WEBBING, RIBBON, CUT LENGTH, 4 1/2" 2.	PARA 3.12.4.9
52	2		1.			FASTENER, SLIDE, CUT LENGTH 9 1/4" 2.	PARA 3.12.9.2
53	2		1.			SIDE RELEASE BUCKLE, FEMALE	PARA 3.12.1.2.21
54	2		1.			BUCKLE, STERNUM	PARA 3.12.1.9.3
55	1		1.			SIDE RELEASE BUCKLE, 3/4", FEMALE	PARA 3.12.1.2.20
56	2		1.			SIDE RELEASE BUCKLE, 1", MALE	PARA 3.12.1.2.21
57	1		1.			SIDE RELEASE BUCKLE, 3/4", MALE	PARA 3.12.1.2.20
58	4		1.			D-RING, PLASTIC	PARA 3.12.1.3.1
59	AR		1.			TAPE, BINDING, 1" WIDE	PARA 3.12.4.5
60	AR		1.			TAPE, BINDING, 1" WIDE	PARA 3.12.4.5
61	1		1.			BUCKLE, LOCK, 1/2" WIDE	PARA 3.12.1.9.10

PARTS LIST	U.S. ARMY NATICK SOLDIER RESEARCH, DEVELOPMENT & ENGINEERING CENTER KANSAS STREET, NATICK MA. 01760-5056	CAGE 81337	PL2-6-0893	REVISION LTR – DATE 11/05/20
LIST TITLE HYDRATION CARRIER ASSEMBLY, USMC PACK			APPROVED T. S. T. S.	REV AUTH NO. DR-S-010-11 / SHEET 8 OF ____ SHEETS

FIND NO.	QTY RQD –1	CAGE	DRAWING OR DOCUMENT NUMBER	DWG SIZE	PART OR IDENTIFYING NUMBER	NOMENCLATURE OR DESCRIPTION	MATERIAL SPECIFICATION
62	1		1.			WEBBING, 1/2" WIDE, CUT LENGTH 8 1/2" 2.	PARA 3.12.4.8
63	2		2-6-0893 1.		2-6-0893-7	STRAP FASTENER ASSEMBLY	PARA 3.12.6
64	2		1.			FASTENER, HOOK, 1" WIDE, CUT LENGTH 2 1/2" 2.	PARA 3.12.6
65	2		1.			FASTENER, LOOP, 1" WIDE, CUT LENGTH 2 1/2" 2.	PARA 3.12.6
66	4		1.			CORD, CUT LENGTH 8" 2.	PARA 3.12.10.3
67	1		2-6-0908 1.		2-6-0908-1	FRONT POCKET, HYDRATION CARRIER	
68	1		1.			ELASTIC 1" WIDE, CUT LENGTH 2" 2.	PARA 3.12.5.1
69	1		1.			WEBBING, 1" WIDE, CUT LENGTH 10" 2.	PARA 3.12.4.1
70	1		1.			WEBBING, 1/2" WIDE, CUT LENGTH 2" 2.	PARA 3.12.4.8
71	1		1.			FASTENER, SLIDE, CUT LENGTH 8 1/2" 2.	PARA 3.12.9.2
72	1	81337	2-6-0904	D	2-6-0904-1	IDENTIFICATION & INSTRUCTION LABEL	PARA 3.25

NOTES:

1. WORKMANSHIP, CONSTRUCTION, STITCHING AND QUALITY ASSURANCE PROVISIONS SHALL CONFORM TO PURCHASE DESCRIPTION, FAMILY OF LOAD BEARING EQUIPMENT, DATED 10 MAY 2011.
2. ALL STITCHING SHALL BE BACKSTITCHED NOT LESS THAN 1/2 INCH.
3. ALL STITCHING TO BE 1/8 INCH FROM EDGE OR APART, UNLESS OTHERWISE SPECIFIED.
4. UNLESS OTHERWISE SPECIFIED, TOLERANCES SHALL BE AS FOLLOWS:
   1/8 INCH OR MORE BUT LESS THAN 2 INCHES --- ±1/16
   2 INCHES OR MORE BUT LESS THAN 10 INCHES -- ±1/8
   10 INCHES OR MORE BUT LESS THAN 36 INCHES - ±1/4
   36 INCHES OR MORE ---------- ±3/8
5. SEAR ALL ENDS OF WEBBING AND TAPE TO PREVENT FRAYING. AVOID FORMING SHARP EDGES.
6. LOCATE FN 72, LABEL, APPROXIMATELY AS SHOWN.
7. STITCHING LOCATED UNDER BARTACK. STITCHING SHOWN OFFSET FOR CLARITY.

ZONE	REV	REVISIONS DESCRIPTION	PROJ OFCR	APPROVER	DATE
	-	INITIAL RELEASE PER DR-S-010-11	T.S.	T.S.	11/05/20

THIS DRAWING HAS BEEN GENERATED AND IS MAINTAINED BY A CAD SYSTEM. CHANGES SHALL ONLY BE INCORPORATED AS DIRECTED BY THE DESIGN ACTIVITY.

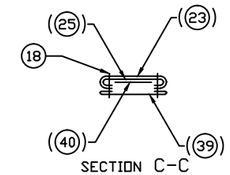

SECTION C-C
ROTATED CCW 15°

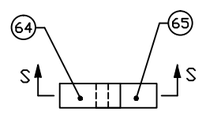

-7
FN 63 STRAP FASTENER ASSEMBLY

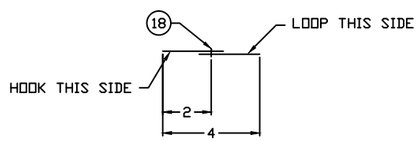

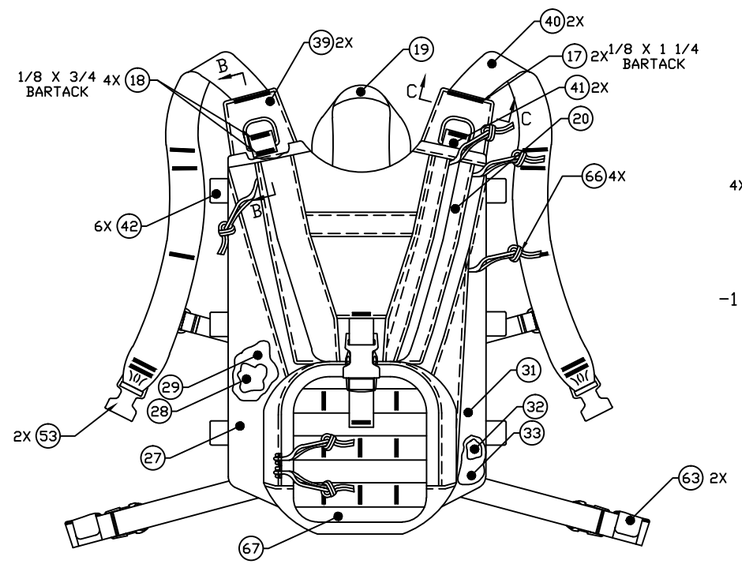

FRONT

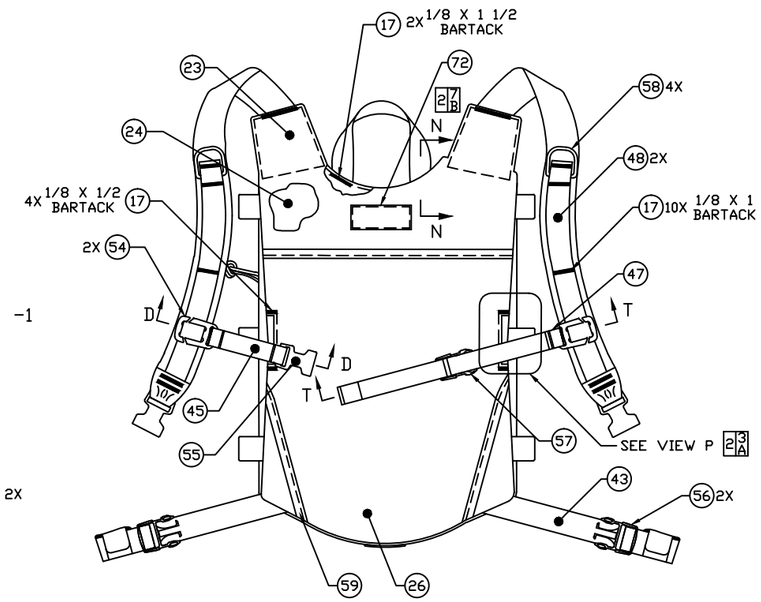

BACK

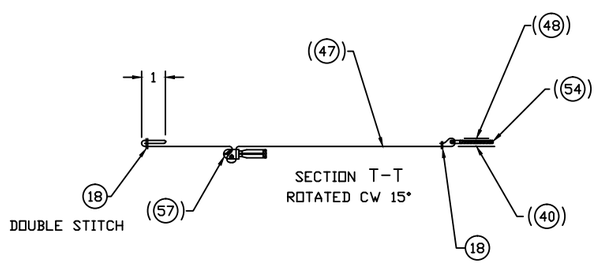

SECTION T-T
ROTATED CW 15°

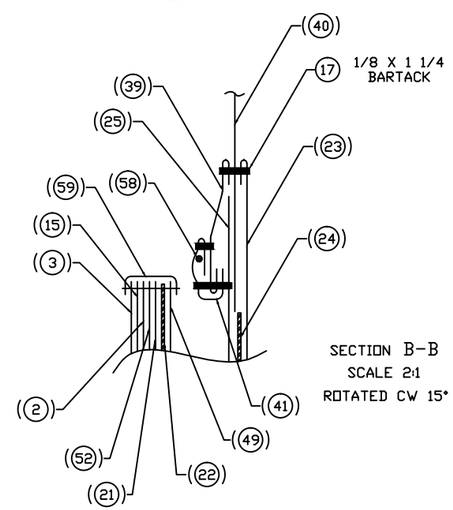

SECTION B-B
SCALE 2:1
ROTATED CW 15°

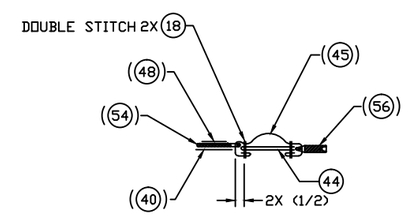

SECTION D-D
ROTATED CCW 15°

SEE SEPARATE PARTS LIST

-	-	-	REVISION
3	2	1	SHEET

REVISION STATUS OF SHEETS

INTERPRET THIS DRAWING IN ACCORDANCE WITH ASME Y14.100

DISTRIBUTION STATEMENT A
THIS DOCUMENT IS APPROVED FOR PUBLIC RELEASE; DISTRIBUTION IS UNLIMITED.

UNLESS OTHERWISE SPECIFIED DIMENSIONS ARE IN INCHES
TOLERANCES:
ANGLES ±
FRACTIONS ±
2 PLACE DIM ±
3 PLACE DIM ±
4

2-6-0894	2-6-0894
NEXT ASSY	USED ON
APPLICATION	

DATE 11/05/05
DRAWN BY C. KRIKORIAN
CHECKED F. KERRIGAN
PROJ OFCR T. SCOTT
APPROVED T. SCOTT
APPROVAL DESIGN ACTIVITY T. SCOTT
APPLICABLE SPEC

U.S. ARMY, RESEARCH, DEVELOPMENT AND ENGINEERING COMMAND, NATICK SOLDIER SYSTEMS CENTER
KANSAS STREET, NATICK, MA 01760-5056

HYDRATION CARRIER ASSEMBLY, USMC PACK

SIZE E | CAGE 81337 | DRAWING NO. 2-6-0893
SCALE 1/2 | UNIT WT. | SHEET 1 OF 3

G:\Drafting1\marine corp pack\2-6-0893S1.dwg

REVISIONS					
ZONE	LTR	DESCRIPTION	PROJ DFCR	APVD	DATE
	-	INITIAL RELEASE PER DR-S-010-11	T. S.	T. S.	11/05/20

THIS DRAWING HAS BEEN GENERATED AND IS MAINTAINED BY A CAD SYSTEM. CHANGES SHALL ONLY BE INCORPORATED AS DIRECTED BY THE DESIGN ACTIVITY.

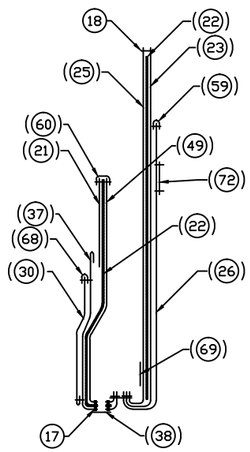

SECTION A-A

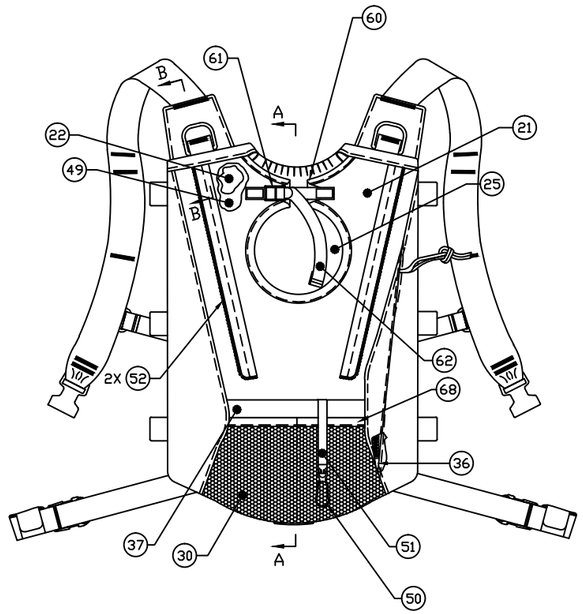

FN 20 AND FN 67 REMOVED FOR CLARITY

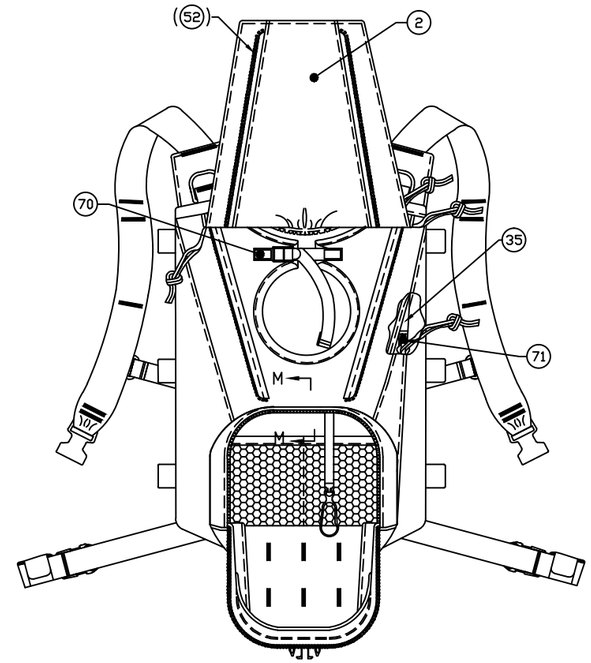

LID AND POCKET SHOWN OPEN

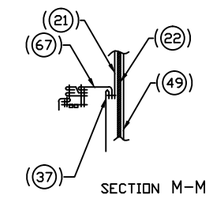

SECTION M-M

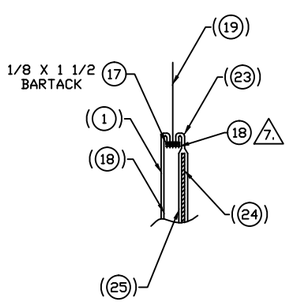

SECTION N-N 1 2/F

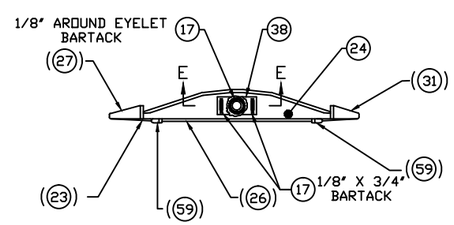

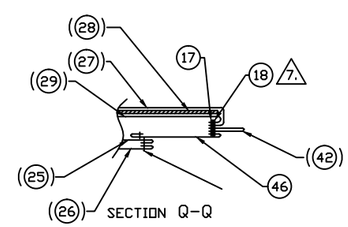

SECTION Q-Q

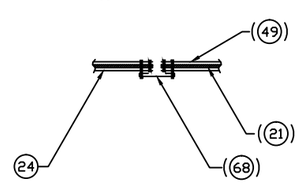

SECTION E-E

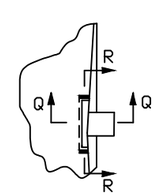

VIEW P 1 1/P

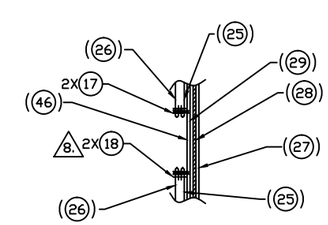

SECTION R-R

DISTRIBUTION STATEMENT A
THIS DOCUMENT IS APPROVED FOR PUBLIC RELEASE; DISTRIBUTION IS UNLIMITED.

SIZE	CAGE	DRAWING NO.
E	81337	2-6-0893
SCALE 1/2	UNIT WT.	SHEET 2 OF 3

2-6-0893

G:\Drafting II\marine corp pack\2-6-0893s2.dwg

REVISIONS					
ZONE	LTR	DESCRIPTION	PROJ DFCR	APVD	DATE
	-	INITIAL RELEASE PER DR-S-010-11	T. S.	T. S.	11/05/20

THIS DRAWING HAS BEEN GENERATED AND IS MAINTAINED BY A CAD SYSTEM. CHANGES SHALL ONLY BE INCORPORATED AS DIRECTED BY THE DESIGN ACTIVITY.

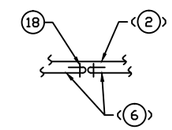

SECTION J-J

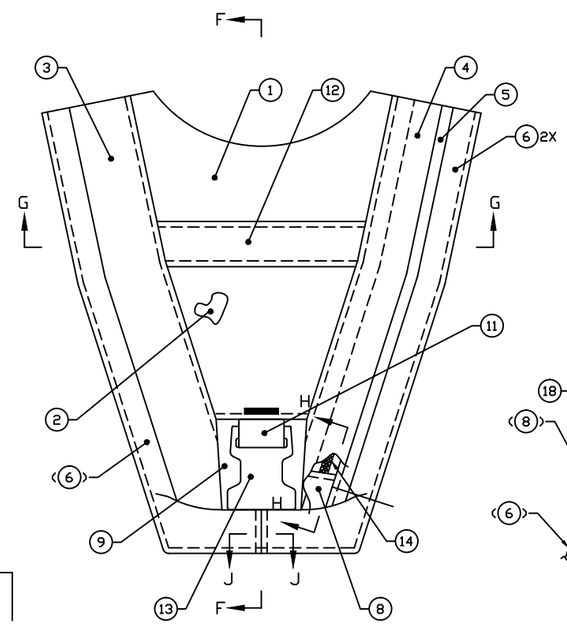

-6 LID ASSEMBLY

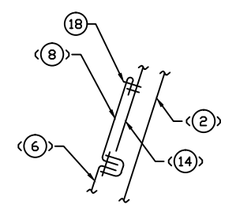

SECTION H-H

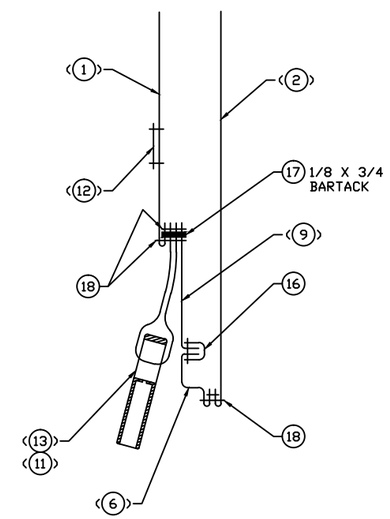

SECTION F-F

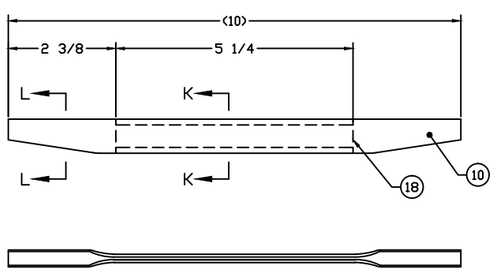

-5 HANDLE ASSEMBLY

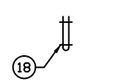

SECTION K-K

SECTION L-L

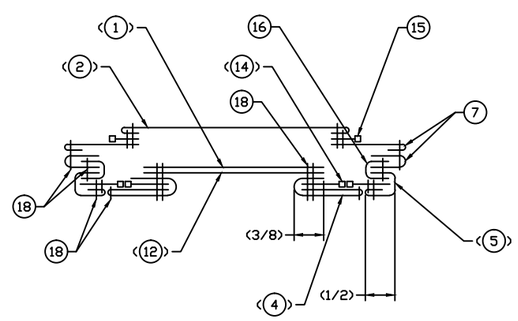

SECTION G-G

DISTRIBUTION STATEMENT A
THIS DOCUMENT IS APPROVED FOR PUBLIC RELEASE; DISTRIBUTION IS UNLIMITED.

SIZE	CAGE	DRAWING NO.
E	81337	2-6-0893
SCALE 1/2	UNIT WT.	SHEET 3 OF 3

2-6-0893 SHT 3

G:\Drafting1\marine corp pack\2-6-0893S3.dwg