REVISIONS				
REV	DESCRIPTION	PROJ OFCR	APVD	DATE
-	INITIAL RELEASE PER DR-S-010-11	T.S.	T.S.	11-05-05

THIS DRAWING HAS BEEN GENERATED AND IS MAINTAINED BY A CAD SYSTEM. CHANGES SHALL ONLY BE INCORPORATED AS DIRECTED BY THE DESIGN ACTIVITY.

1. REFER TO PURCHASE DESCRIPTION, FAMILY OF IMPROVED LOAD BEARING EQUIPMENT, DATED 10 MAY 2011.

DISTRIBUTION STATEMENT A

THIS DOCUMENT IS APPROVED FOR PUBLIC RELEASE; DISTRIBUTION IS UNLIMITED.

REV LEVEL	-	-	-	-	-	-										
SHEET NO.	1	2	3	4	5	6										

REVISION STATUS OF SHEETS

INTERPRET THIS DRAWING IN ACCORDANCE WITH ASME Y14.100

UNLESS OTHERWISE SPECIFIED:
DIMENSIONS ARE IN INCHES
TOLERANCES:
ANGLES ± -
FRACTIONS ± -
2 PLACE DIM ± -
3 PLACE DIM ± -

DATE	11-05-05
DRAWN BY	H. WELCH
CHECKED	F. KERRIGAN
PROJ OFCR	T. SCOTT
APPROVED	T. SCOTT
APPROVAL DESIGN ACTIVITY	T. SCOTT
APPLICABLE SPEC	-

2-6-0894	2-6-0894
NEXT ASSY	USED ON
APPLICATION	

U.S. ARMY NATICK SOLDIER RESEARCH, DEVELOPMENT & ENGINEERING CENTER
KANSAS STREET, NATICK MA. 01760-5056

ASSAULT PACK
ASSEMBLY, USMC PACK

SIZE	CAGE	DRAWING NO.
A	81337	PL 2-6-0892

SCALE: N/A | UNIT WT. | SHEET 1 OF 6

G:\Drafting1\marine corp pack\2-6-0892pls1.dwg

PARTS LIST	U.S. ARMY NATICK SOLDIER RESEARCH, DEVELOPMENT & ENGINEERING CENTER KANSAS STREET, NATICK MA. 01760-5056	CAGE 81337	PL2-6-0892	REVISION LTR – DATE 11/05/05
LIST TITLE ASSAULT PACK ASSEMBLY, USMC PACK			APPROVED T. S. T. S.	REV AUTH NO. DR-S-010-11 / SHEET 2 OF ____ SHEETS

FIND NO.	QTY RQD -1	CAGE	DRAWING OR DOCUMENT NUMBER	DWG SIZE	PART OR IDENTIFYING NUMBER	NOMENCLATURE OR DESCRIPTION	MATERIAL SPECIFICATION
1	1		2-6-0897		2-6-0897-1	FRONT POCKET ASSEMBLY, ASSAULT PACK	
2	1		2-6-0926 1.		2-6-0926-32	OUTER BACK UPPER	PARA 3.12.7.2 CLOTH, NYLON, 500D
3						DELETED	
4	2		2-6-0926 1.		2-6-0926-45	ZIP STRIP	PARA 3.12.7.2 CLOTH, NYLON, 500D
5	1		2-6-0926 1.		2-6-0926-1	BACK PANEL UPPER	PARA 3.12.7.2 CLOTH, NYLON, 500D
6	1		2-6-0926 1.		2-6-0926-18	BODY PANEL MAIN	PARA 3.12.7.2 CLOTH, NYLON, 500D
7	1		2-6-0902 1.		2-6-0902-1	SHOULDER HARNESS POCKET ASSEMBLY, ASSAULT PACK	
8	1		2-6-0926 1.		2-6-0926-46	ZIP STRIP LINER	PARA 3.12.7.2 CLOTH, NYLON, 500D
9	1		2-6-0926 1.		2-6-0926-4	BACK PANEL LINER	PARA 3.12.7.2 CLOTH, NYLON, 500D

PARTS LIST	U.S. ARMY NATICK SOLDIER RESEARCH, DEVELOPMENT & ENGINEERING CENTER KANSAS STREET, NATICK MA. 01760-5056	CAGE 81337	PL2-6-0892	REVISION LTR – DATE 11/05/05
LIST TITLE ASSAULT PACK ASSEMBLY, USMC PACK			APPROVED T. S. T. S.	REV AUTH NO. DR-S-010-11 / SHEET 3 OF ____ SHEETS

FIND NO.	QTY RQD -1	CAGE	DRAWING OR DOCUMENT NUMBER	DWG SIZE	PART OR IDENTIFYING NUMBER	NOMENCLATURE OR DESCRIPTION	MATERIAL SPECIFICATION
10	1		2-6-0926 1.		2-6-0926-36	RADIO POCKET STRIP	PARA 3.12.7.2 CLOTH, NYLON, 500D
11	1		2-6-0926 1.		2-6-0926-39	RADIO POCKET MAIN	PARA 3.12.7.2 CLOTH, NYLON, 500D
12	1		2-6-0926 1.		2-6-0926-26	INNER BACK POCKET UPPER	PARA 3.12.7.5
13	1		2-6-0926 1.		2-6-0926-35	POCKET INNER LINER LOWER	PARA 3.12.7.5
14	1		2-6-0926 1.		2-6-0926-31	OUTER BOTTOM	PARA 3.12.7.2 CLOTH, NYLON, 500D
15	1		2-6-0926 1.		2-6-0926-3	HIGHSIDE	PARA 3.12.7.2 CLOTH, NYLON, 500D
16	1		2-6-0926 1.		2-6-0926-55	ZIP PLUG LOWSIDE	PARA 3.12.7.2 CLOTH, NYLON, 500D
17	1		2-6-0898 1.		2-6-0898-1	SHOULDER HARNESS ASSEMBLY, ASSAULT PACK	
18	3		2-6-0926 1.		2-6-0926-10	WEBBING, 1" WIDE, CUT LENGTH 11 1/2"	PARA 3.12.4.1
19	8		2-6-0926 1.		2-6-0926-12	WEBBING, 1" WIDE, CUT LENGTH 6 1/2"	PARA 3.12.4.1
20	8		2-6-0926 1.		2-6-0926-15	WEBBING, 1" WIDE, CUT LENGTH 2"	PARA 3.12.4.1

PARTS LIST	U.S. ARMY NATICK SOLDIER RESEARCH, DEVELOPMENT & ENGINEERING CENTER KANSAS STREET, NATICK MA. 01760-5056	CAGE 81337	PL2-6-0892	REVISION LTR – DATE 11/05/05
LIST TITLE ASSAULT PACK ASSEMBLY, USMC PACK			APPROVED T. S. T. S.	REV AUTH NO. DR-S-010-11 / SHEET 4 OF ____ SHEETS

FIND NO.	QTY RQD – 1	CAGE	DRAWING OR DOCUMENT NUMBER	DWG SIZE	PART OR IDENTIFYING NUMBER	NOMENCLATURE OR DESCRIPTION	MATERIAL SPECIFICATION
21	1		1.			FASTENER, SLIDE, CUT LENGTH 11 3/4″	PARA 3.12.9.7
22	2		2-6-0926 1.		2-6-0926-19	WEBBING, 1″ WIDE, CUT LENGTH 12 1/2″	PARA 3.12.4.1
23	6		2-6-0926 1.		2-6-0926-21	WEBBING, 1″ WIDE, CUT LENGTH 2 1/2″	PARA 3.12.4.1
24	6		1.			BUCKLE, SIDE RELEASE, FEMALE, 1″	PARA 3.12.1.2.16
25	6		1.			BUCKLE, SIDE RELEASE, MALE, 1″	PARA 3.12.1.2.10
26	6		2-6-0926 1.		2-6-0926-20	WEBBING, 1″ WIDE, CUT LENGTH 19″	PARA 3.12.4.1
27						DELETED	PARA 3.12.4.1
28	AR		1.			TAPE BINDING, 1″ WIDE	PARA 3.12.4.5
29	1		1.			FASTENER, SLIDE, CUT LENGTH 13″	PARA 3.12.9.7
30	1		1.			FASTENER, SLIDE, CUT LENGTH 29″	PARA 3.12.9.5
31	1		2-6-0926 1.		2-6-0926-11	BACK PANEL, PLASTIC	PARA 3.12.3.3
32	2		2-6-0926 1.		2-6-0926-30	WEBBING, 1.5″ WIDE, CUT LENGTH 17″	PARA 3.12.4.2
33						DELETED	
34	1		1.			BUCKLE, SIDE RELEASE, MALE, 1.5″	PARA 3.12.1.2.22
35	1		1.			BUCKLE, SIDE RELEASE, FEMALE, 1.5″	PARA 3.12.1.2.22

PARTS LIST	U.S. ARMY NATICK SOLDIER RESEARCH, DEVELOPMENT & ENGINEERING CENTER KANSAS STREET, NATICK MA. 01760-5056	CAGE 81337	PL2-6-0892	REVISION LTR – DATE 11/05/05
LIST TITLE ASSAULT PACK ASSEMBLY, USMC PACK			APPROVED T. S. T. S.	REV AUTH NO. DR-S-010-11 / SHEET 5 OF ____ SHEETS

FIND NO.	QTY RQD –1	CAGE	DRAWING OR DOCUMENT NUMBER	DWG SIZE	PART OR IDENTIFYING NUMBER	NOMENCLATURE OR DESCRIPTION	MATERIAL SPECIFICATION
36	2		2-6-0926 1.		2-6-0926-49	SUPERMAN	PARA 3.12.7.2 CLOTH, NYLON, 500D
37	2		2-6-0926 1.		2-6-0926-60	WEBBING, 1" WIDE, CUT LENGTH 3"	PARA 3.12.4.1
38	2		1.			D-RING, METAL	PARA 3.12.1.3.2
39	1		2-6-0905		2-6-0905-1	HANDLE ASSEMBLY, ASSAULT PACK	
40	2		2-6-0926 1.		2-6-0926-53	TOP HANDLE FASTENER, LOOP, 2", CUT LENGTH 2 1/2"	PARA 3.12.6
41	AR		1.			THREAD, SIZE E	PARA 3.12.8.2
42	AR		1.			THREAD, SIZE F	PARA 3.12.8.1
43	2		2-6-0926 1.		2-6-0926-54	WEBBING, 1" WIDE, TOP STRAP	PARA 3.12.4.1
44	4		1.			CORD, ROUND, CUT LENGTH 9"	PARA 3.12.10.3
45	1		2-6-0926 1.		2-6-0926-22	HIGHSIDE INNER POCKET	PARA 3.12.7.2 CLOTH, NYLON, 500D
46	1		2-6-0926 1.		2-6-0926-29	LOWER SIDE INNER POCKET	PARA 3.12.7.2 CLOTH, NYLON, 500D

PARTS LIST	U.S. ARMY NATICK SOLDIER RESEARCH, DEVELOPMENT & ENGINEERING CENTER KANSAS STREET, NATICK MA. 01760-5056	CAGE 81337	PL2-6-0892	REVISION LTR – DATE 11/05/05
LIST TITLE ASSAULT PACK ASSEMBLY, USMC PACK			APPROVED T. S. T. S.	REV AUTH NO. DR-S-010-11 / SHEET 6 OF ____ SHEETS

FIND NO.	QTY RQD -1	CAGE	DRAWING OR DOCUMENT NUMBER	DWG SIZE	PART OR IDENTIFYING NUMBER	NOMENCLATURE OR DESCRIPTION	MATERIAL SPECIFICATION
47	1		2-6-0926 1.		2-6-0926-38	WEBBING, 1" WIDE, RADIO POCKET STRAP, CUT LENGTH 12"	PARA 3.12.4.1
48	1		2-6-0926 1.		2-6-0926-37	WEBBING, 1" WIDE, RADIO POCKET, CUT LENGTH 7"	PARA 3.12.4.1
49	1		1.			BUCKLE, LOCK, 1"	PARA 3.12.1.9.7
50	3		1.			GROMMET	PARA 3.12.1.6.1
51	1	81337	2-6-0904	D	2-6-0904-1	IDENTIFICATION & INSTRUCTION LABEL	PARA 3.25
52	8		1.			FASTENER, HOOK, 1" WIDE, CUT LENGTH 2 1/2""	PARA 3.12.6
53	8		1.			FASTENER, LOOP, 1" WIDE, CUT LENGTH 2 1/2"	PARA 3.12.6
54	8		2-6-0892 1.		2-6-0892-5	STRAP FASTENER, HOOK AND LOOP, 1"	PARA 3.12.6
55	1		2-6-0892 1.		2-6-0892-23	PATTERN, INNER BOTTOM	PARA 3.12.7.2 CLOTH, NYLON, 500D

NOTES:

1. WORKMANSHIP, CONSTRUCTION, STITCHING AND QUALITY ASSURANCE PROVISIONS SHALL CONFORM TO PURCHASE DESCRIPTION, FAMILY OF IMPROVED. LOAD BEARING EQUIPMENT DATED 10 MAY 2011.
2. LOCATE FN 51, LABEL, APPROXIMATELY AS SHOWN.
3. ALL STITCHING SHALL BE BACKSTITCHED NOT LESS THAN 1/2.
4. ALL STITCHING TO BE 1/8 INCH FROM EDGE OR APART, UNLESS OTHERWISE SPECIFIED.
5. UNLESS OTHERWISE SPECIFIED, TOLERANCES SHALL BE AS FOLLOWS:
   1/8 INCH OR MORE BUT LESS THAN 2 INCHES --- ±1/16
   2 INCHES OR MORE BUT LESS THAN 10 INCHES -- ±1/8
   10 INCHES OR MORE BUT LESS THAN 36 INCHES - ±1/4
   36 INCHES OR MORE ---------- ±3/8
6. SEAR ALL ENDS OF WEBBING AND TAPE TO PREVENT FRAYING. AVOID FORMING SHARP EDGES.
7. CARRY STITCHING OVER END ONE STITCH MINIMUM.
8. CENTER THE 2" LONG CROSS-X CUT IN FN 40 AS SHOWN. CUT THROUGH FNS 40 AND 4 TWO TIMES.
9. UNLESS OTHERWISE SPECIFIED ALL FOLDS, HEMS AND TURN UNDERS SHALL BE 3/8.
10. OVERLAP THE BOTTOM INTERIOR BINDING TAPE, FN 28 BY 1".
11. REFERENCE PATTERN 2-6-0926-56

REVISIONS					
ZONE	LTR	DESCRIPTION	PROJ DFCR	APVD	DATE
	-	INITIAL RELEASE PER DR-S-010-11	T.S.	T.S.	11-05-05

THIS DRAWING HAS BEEN GENERATED AND IS MAINTAINED BY A CAD SYSTEM. CHANGES SHALL ONLY BE INCORPORATED AS DIRECTED BY THE DESIGN ACTIVITY.

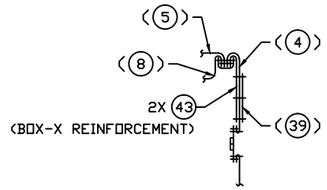

SECTION G-G
(FNS 7 AND 17 REMOVED FOR CLARITY)

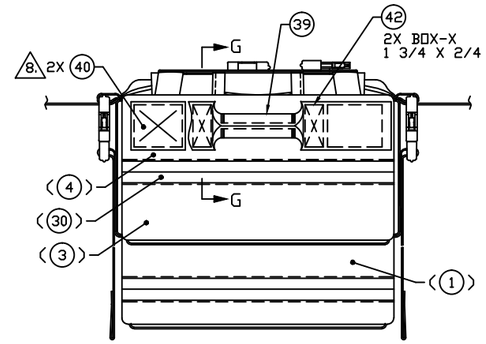

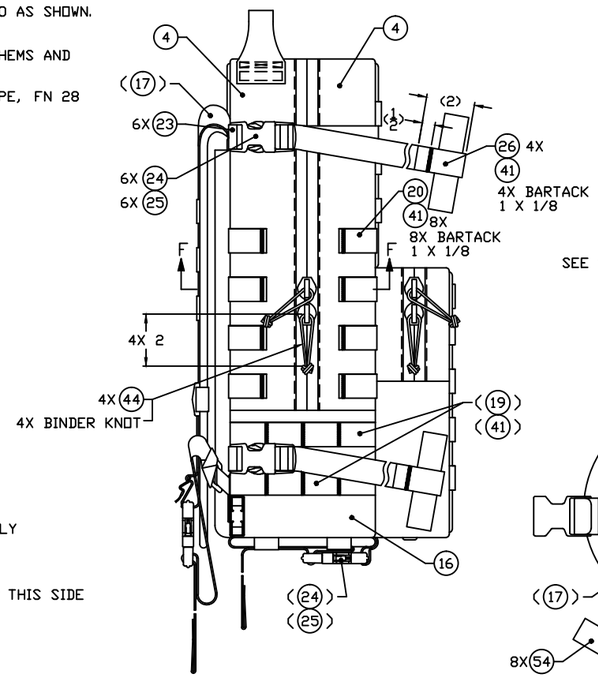

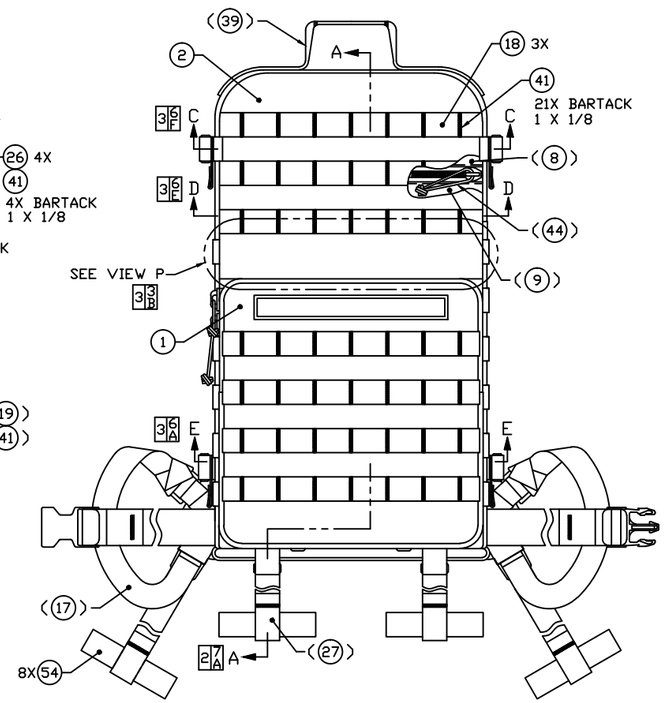

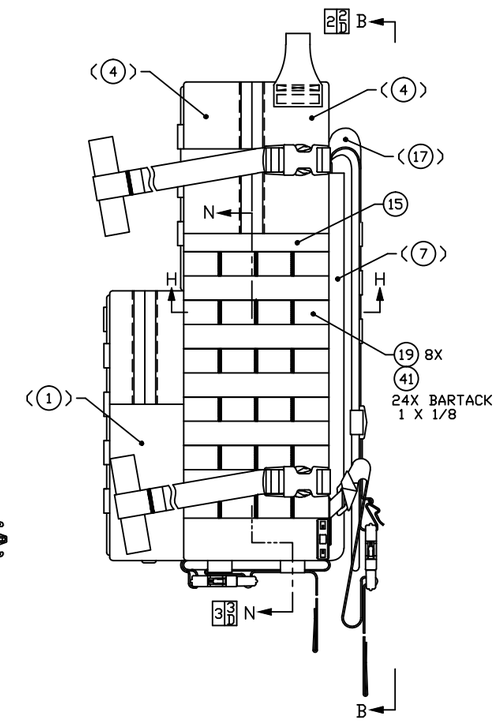

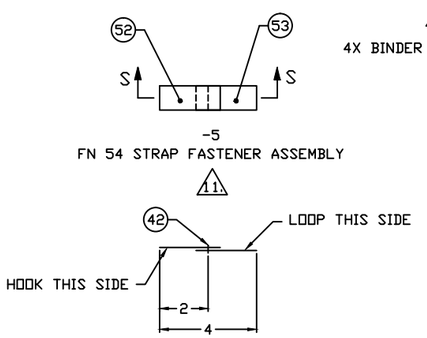

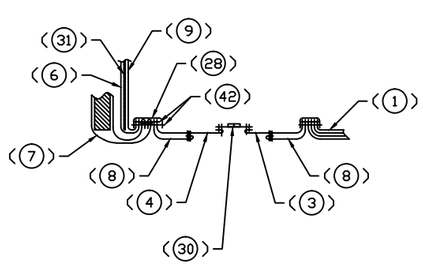

SECTION F-F
(FN 17 REMOVED FOR CLARITY)

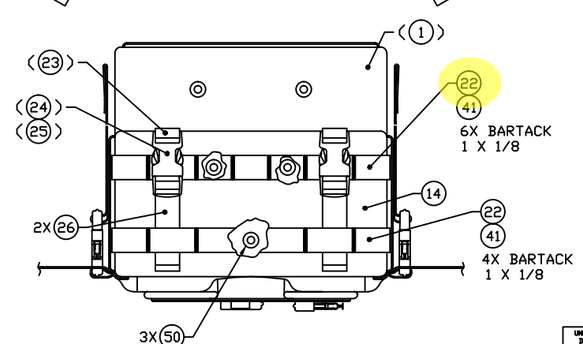

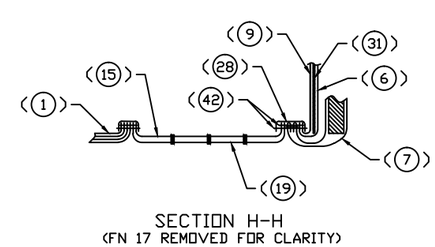

SECTION H-H
(FN 17 REMOVED FOR CLARITY)

SEE SEPARATE PARTS LIST

-	-	-	REVISION	
3	2	1	SHEET	

REVISION STATUS OF SHEETS

INTERPRET THIS DRAWING IN ACCORDANCE WITH ASME Y14.100

UNLESS OTHERWISE SPECIFIED DIMENSIONS ARE IN INCHES
TOLERANCES:
ANGLES ±
FRACTIONS ±
2 PLACE DIM ±
3 PLACE DIM ±

DATE 11-05-03
DRAWN BY H. WELCH
CHECKED F. KERRIGAN
PROJ DFCR T. SCOTT
APPROVED T. SCOTT
APPROVAL DESIGN ACTIVITY T. SCOTT
APPLICABLE SPEC

NEXT ASSY	USED ON
2-6-0894	2-6-0894

APPLICATION

U.S. ARMY NATICK SOLDIER RESEARCH, DEVELOPMENT & ENGINEERING CENTER
KANSAS STREET, NATICK MA. 01760-5056

ASSAULT PACK ASSEMBLY, USMC

SIZE E | CAGE 81337 | DRAWING NO. 2-6-0892

SCALE 1/2 | UNIT WT. | SHEET 1 OF 3

DISTRIBUTION STATEMENT A
THIS DOCUMENT IS APPROVED FOR PUBLIC RELEASE; DISTRIBUTION IS UNLIMITED.

G:\Drafting1\marine corp pack\2-6-0892s1.dwg

REVISIONS					
ZONE	LTR	DESCRIPTION	PROJ DFCR	APVD	DATE
	-	INITIAL RELEASE PER DR-S-010-11	T.S.	T.S.	11-05-05

THIS DRAWING HAS BEEN GENERATED AND IS MAINTAINED BY A CAD SYSTEM. CHANGES SHALL ONLY BE INCORPORATED AS DIRECTED BY THE DESIGN ACTIVITY.

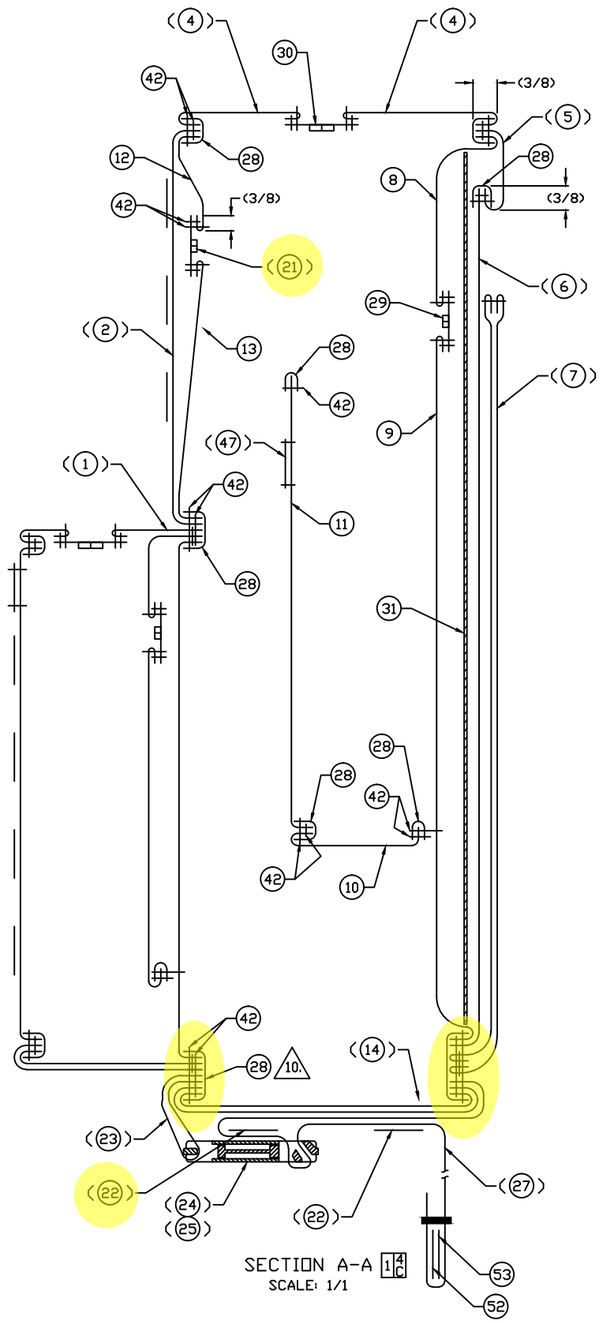

SECTION A-A 1 4/C
SCALE: 1/1

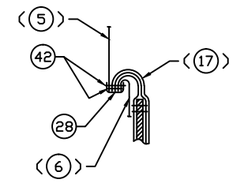

SECTION M-M
2X

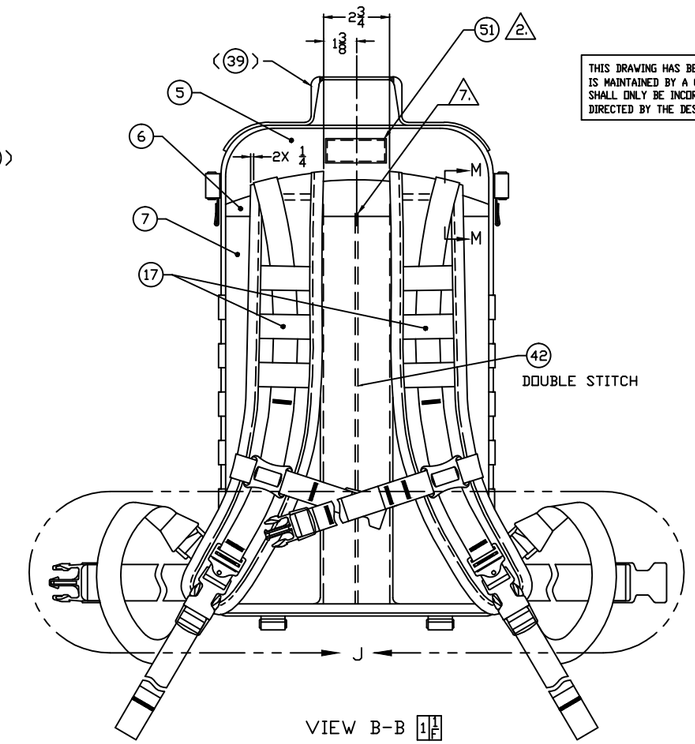

VIEW B-B 1 1/F

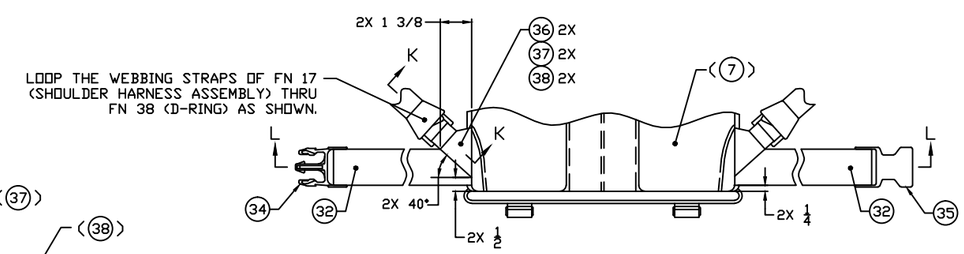

VIEW J
(PART OF FN 17 REMOVED FOR CLARITY)

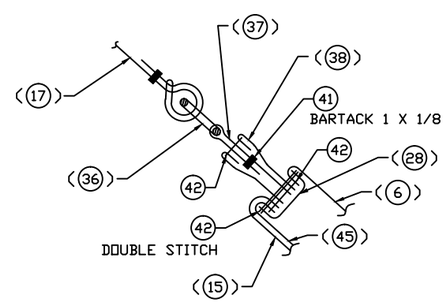

SECTION K-K
SCALE: 1/1
1X AS SHOWN, 1X OPPOSITE HAND

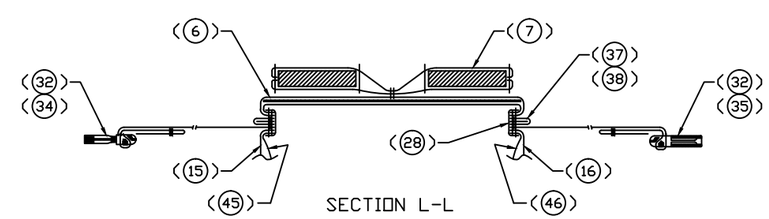

SECTION L-L

DISTRIBUTION STATEMENT A
THIS DOCUMENT IS APPROVED FOR PUBLIC RELEASE; DISTRIBUTION IS UNLIMITED.

SIZE	CAGE	DRAWING NO.
E	81337	2-6-0892
SCALE 1/2	UNIT WT.	SHEET 2

G:\Drafting1\marine corp pack\2-6-0892s2.dwg

REVISIONS					
ZONE	LTR	DESCRIPTION	PROJ DFCR	APVD	DATE
	-	INITIAL RELEASE PER DR-S-010-11	T.S.	T.S.	11-05-05

THIS DRAWING HAS BEEN GENERATED AND IS MAINTAINED BY A CAD SYSTEM. CHANGES SHALL ONLY BE INCORPORATED AS DIRECTED BY THE DESIGN ACTIVITY.

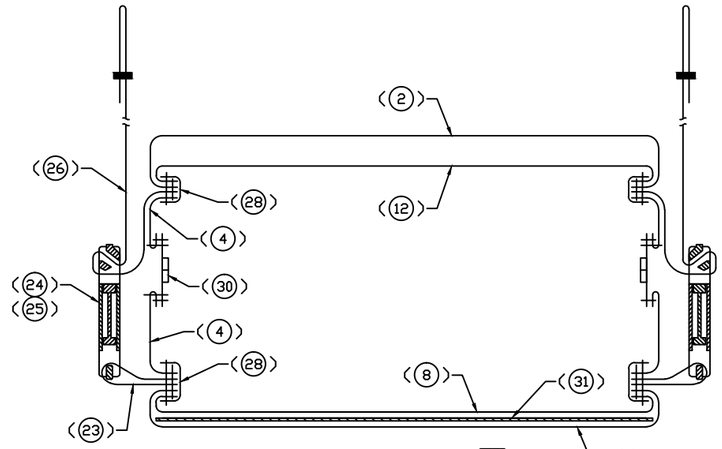

SECTION C-C 1 4 F
SCALE: 1/1

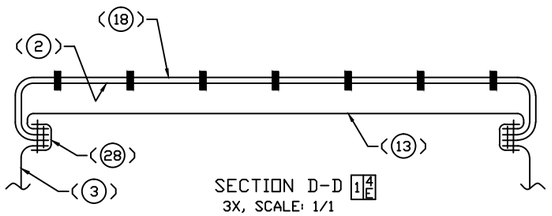

SECTION D-D 1 4 E
3X, SCALE: 1/1

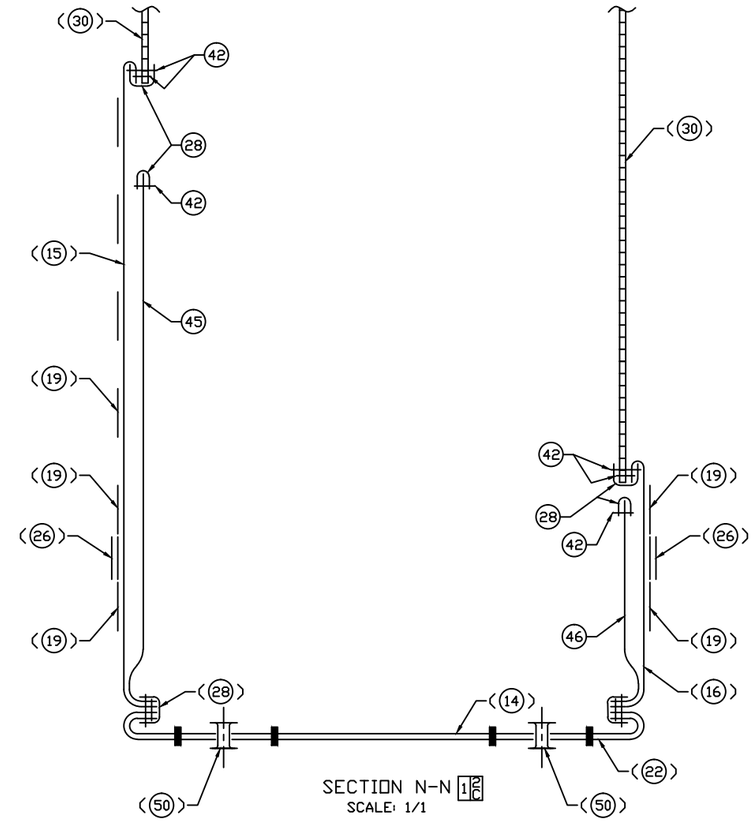

SECTION N-N 1 2 C
SCALE: 1/1

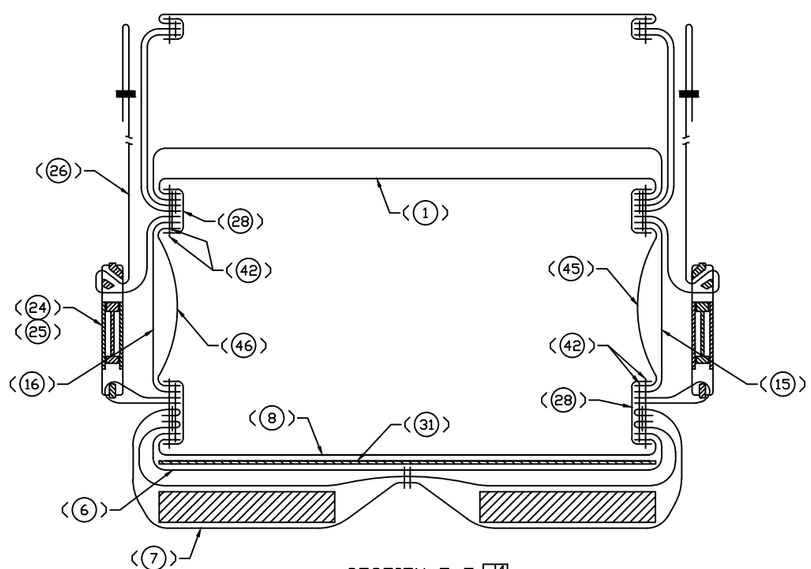

SECTION E-E 1 4 D
SCALE: 1/1

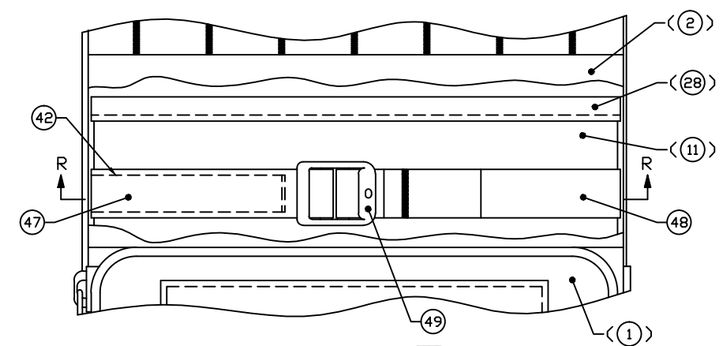

VIEW P 1 4 E

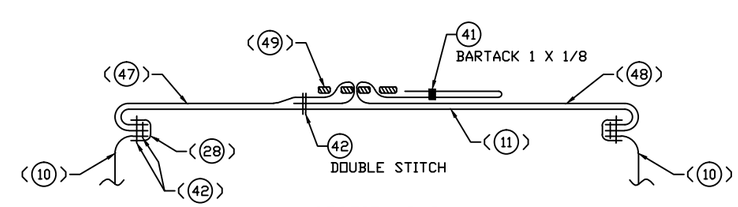

SECTION R-R
SCALE: 1/1

DISTRIBUTION STATEMENT A
THIS DOCUMENT IS APPROVED FOR PUBLIC RELEASE; DISTRIBUTION IS UNLIMITED.

SIZE	CAGE	DRAWING NO.
E	81337	2-6-0892
SCALE 1/2	UNIT WT.	SHEET 3

G:\Drafting1\marine corp pack\2-6-0892s3.dwg