REVISIONS				
REV	DESCRIPTION	PROJ OFCR	APVD	DATE
-	INITIAL RELEASE PER DR-S-010-11	T.S.	T.S.	11-05-05

THIS DRAWING HAS BEEN GENERATED AND IS MAINTAINED BY A CAD SYSTEM. CHANGES SHALL ONLY BE INCORPORATED AS DIRECTED BY THE DESIGN ACTIVITY.

1. REFER TO PURCHASE DESCRIPTION, FAMILY OF IMPROVED LOAD BEARING EQUIPMENT, DATED 10 MAY 2011.

2. CUT LENGTHS ARE FOR REFERENCE ONLY.

DISTRIBUTION STATEMENT A

THIS DOCUMENT IS APPROVED FOR PUBLIC RELEASE; DISTRIBUTION IS UNLIMITED.

REV LEVEL	-	-	-													
SHEET NO.	1	2	3													

REVISION STATUS OF SHEETS

INTERPRET THIS DRAWING IN ACCORDANCE WITH ASME Y14.100

UNLESS OTHERWISE SPECIFIED:
DIMENSIONS ARE IN INCHES
TOLERANCES:
ANGLES ± -
FRACTIONS ± -
2 PLACE DIM ± -
3 PLACE DIM ± -

DATE	11-05-05
DRAWN BY	H. WELCH
CHECKED	F. KERRIGAN
PROJ OFCR	T. SCOTT
APPROVED	T. SCOTT
APPROVAL DESIGN ACTIVITY	T. SCOTT
APPLICABLE SPEC	-

U.S. ARMY NATICK SOLDIER RESEARCH, DEVELOPMENT & ENGINEERING CENTER
KANSAS STREET, NATICK MA. 01760-5056

SHOULDER HARNESS ASSEMBLY, ASSAULT PACK

NEXT ASSY	USED ON
2-6-0892	2-6-0894
APPLICATION	

SIZE	CAGE	DRAWING NO.
A	81337	PL 2-6-0898
SCALE: N/A	UNIT WT.	SHEET 1 OF 3

G:\Drafting1\marine corp pack\2-6-0898pls1.dwg

PARTS LIST	U.S. ARMY NATICK SOLDIER RESEARCH, DEVELOPMENT & ENGINEERING CENTER KANSAS STREET, NATICK MA. 01760-5056	CAGE 81337	PL2-6-0898	REVISION LTR – DATE 11/05/05
LIST TITLE SHOULDER HARNESS ASSEMBLY, ASSAULT PACK			APPROVED T. S. T. S.	REV AUTH NO. DR-S-010-11 / SHEET 2 OF ____ SHEETS

FIND NO.	QTY RQD -1	CAGE	DRAWING OR DOCUMENT NUMBER	DWG SIZE	PART OR IDENTIFYING NUMBER	NOMENCLATURE OR DESCRIPTION	MATERIAL SPECIFICATION
1	1		2-6-0926 1.		2-6-0926-33	OUTER STRAP, LEFT	PARA 3.12.7.2 CLOTH, NYLON, 500D
2	1		2-6-0926 1.		2-6-0926-27	LEFT STRAP FOAM	PARA 3.12.2.3
3	1		2-6-0926 1.		2-6-0926-24	INNER STRAP, LEFT	PARA 3.12.7.6
4	AR		1.			TAPE BINDING, 1" WIDE	PARA 3.12.4.5
5	6		2-6-0926 1.		2-6-0926-44	WEBBING, 1" WIDE, CUT LENGTH 3 1/4" 2.	PARA 3.12.4.1
6	2		2-6-0926 1.		2-6-0926-42	WEBBING, 1" WIDE, CUT LENGTH 20" 2.	PARA 3.12.4.1
7	1		2-6-0926 1.		2-6-0926-43	WEBBING, 1" WIDE, CUT LENGTH 12" 2.	PARA 3.12.4.1
8	3		1.			BUCKLE, SIDE RELEASE, FEMALE, 1"	PARA 3.12.1.2.16
9	1		2-6-0926 1.		2-6-0926-58	WEBBING, 1" WIDE, CUT LENGTH 27" 2.	PARA 3.12.4.1
10	2		1.			BUCKLE, TENSION LOCK, 1"	PARA 3.12.1.9.2
11	2		1.			BUCKLE, NONSLIP DOUBLE BAR, 1"	PARA 3.12.1.2.1
12	2		2-6-0926 1.		2-6-0926-50	WEBBING, 1" WIDE, CUT LENGTH 34" 2.	PARA 3.12.4.1
13	AR		1.			THREAD, SIZE E	PARA 3.12.8.2
14	AR		1.			THREAD, SIZE F	PARA 3.12.8.1

PARTS LIST	U.S. ARMY NATICK SOLDIER RESEARCH, DEVELOPMENT & ENGINEERING CENTER KANSAS STREET, NATICK MA. 01760-5056	CAGE 81337	PL2-6-0898	REVISION LTR – DATE 11/05/05
LIST TITLE SHOULDER HARNESS ASSEMBLY, ASSAULT PACK			APPROVED T. S. / T. S.	REV AUTH NO. DR-S-010-11 / SHEET 3 OF ____ SHEETS

FIND NO.	QTY RQD -1	CAGE	DRAWING OR DOCUMENT NUMBER	DWG SIZE	PART OR IDENTIFYING NUMBER	NOMENCLATURE OR DESCRIPTION	MATERIAL SPECIFICATION
15	1		2-6-0926 (1.)		2-6-0926-34	OUTER STRAP, RIGHT	PARA 3.12.7.2 CLOTH, NYLON, 500D
16	1		2-6-0926 (1.)		2-6-0926-41	RIGHT STRAP FOAM	PARA 3.12.2.3
17	1		2-6-0926 (1.)		2-6-0926-25	INNER STRAP, RIGHT	PARA 3.12.7.6
18	1		(1.)			WEBBING, 1 1/2" WIDE, CUT LENGTH 3" (2.)	PARA 3.12.4.2
19	3		(1.)			BUCKLE, SIDE RELEASE, MALE, 1"	PARA 3.12.1.2.10

NOTES:

1. WORKMANSHIP, CONSTRUCTION, STITCHING AND QUALITY ASSURANCE PROVISIONS SHALL CONFORM TO PURCHASE DESCRIPTION, FAMILY OF IMPROVED LOAD BEARING EQUIPMENT DATED 10 MAY 2011.
2. PRIOR TO SEWING FN 4 BINDING TAPE INTO PLACE AS SHOWN, STITCH FNS 1, 2 AND 3 TOGETHER USING FN 14.
3. UNLESS OTHERWISE SPECIFIED, TOLERANCES SHALL BE AS FOLLOWS:
   1/8 INCH OR MORE BUT LESS THAN 2 INCHES --- ±1/16
   2 INCHES OR MORE BUT LESS THAN 10 INCHES -- ±1/8
   10 INCHES OR MORE BUT LESS THAN 36 INCHES - ±1/4
   36 INCHES OR MORE ---------- ±3/8
4. ALL STITCHING SHALL BE BACKSTITCHED NOT LESS THAN 1/2 INCH UNLESS TURNED UNDER BY A HEM OR HELD BY OTHER STITCHING.
5. ALL STITCHING TO BE 1/8 INCH FROM EDGE OR SPACED 1/8 INCH APART, UNLESS OTHERWISE SPECIFIED.
6. SEAR ALL ENDS OF WEBBING AND TAPE TO PREVENT FRAYING. AVOID FORMING SHARP EDGES.

REVISIONS					
ZONE	LTR	DESCRIPTION	PROJ OFCR	APVD	DATE
	-	INITIAL RELEASE PER DR-S-010-11	T. S.	T. S.	11-05-05

THIS DRAWING HAS BEEN GENERATED AND IS MAINTAINED BY A CAD SYSTEM. CHANGES SHALL ONLY BE INCORPORATED AS DIRECTED BY THE DESIGN ACTIVITY.

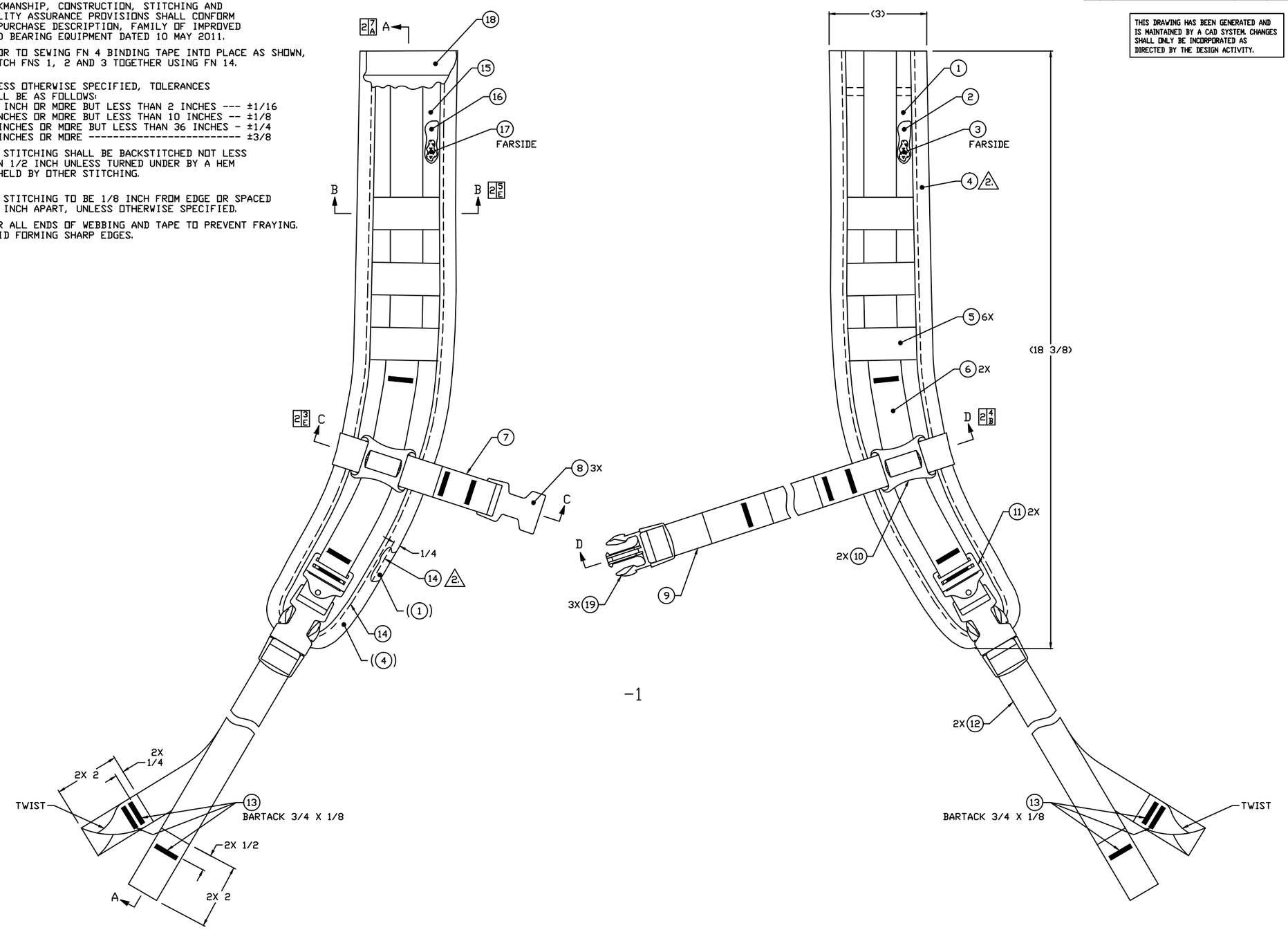

SEE SEPARATE PARTS LIST

INTERPRET THIS DRAWING IN ACCORDANCE WITH ASME Y14.100		
	-	-	REVISION
	2	1	SHEET
REVISION STATUS OF SHEETS		

UNLESS OTHERWISE SPECIFIED DIMENSIONS ARE IN INCHES
TOLERANCES:
ANGLES ±
FRACTIONS ±
2 PLACE DIM ±
3 PLACE DIM ±
3.

2-6-0892	2-6-0894
NEXT ASSY	USED ON
APPLICATION	

DATE 11-05-05
DRAWN BY H. WELCH
CHECKED F. KERRIGAN
PROJ OFCR T. SCOTT
APPROVED T. SCOTT
APPROVAL DESIGN ACTIVITY T. SCOTT
APPLICABLE SPEC

U.S. ARMY NATICK SOLDIER RESEARCH, DEVELOPMENT & ENGINEERING CENTER
KANSAS STREET, NATICK MA 01760-5056

SHOULDER HARNESS ASSEMBLY, ASSAULT PACK

SIZE	CAGE	DRAWING NO.
E	81337	2-6-0898
SCALE 1/1	UNIT WT.	SHEET 1 OF 2

DISTRIBUTION STATEMENT A
THIS DOCUMENT IS APPROVED FOR PUBLIC RELEASE; DISTRIBUTION IS UNLIMITED.

2-6-0898 SHT 1

G:\Drafting11\marine corp pack\2-6-0898s1.dwg

REVISIONS					
ZONE	LTR	DESCRIPTION	PROJ OFCR	APVD	DATE
	-	INITIAL RELEASE PER DR-S-010-11	T. S.	X. X.	11-05-05

THIS DRAWING HAS BEEN GENERATED AND IS MAINTAINED BY A CAD SYSTEM. CHANGES SHALL ONLY BE INCORPORATED AS DIRECTED BY THE DESIGN ACTIVITY.

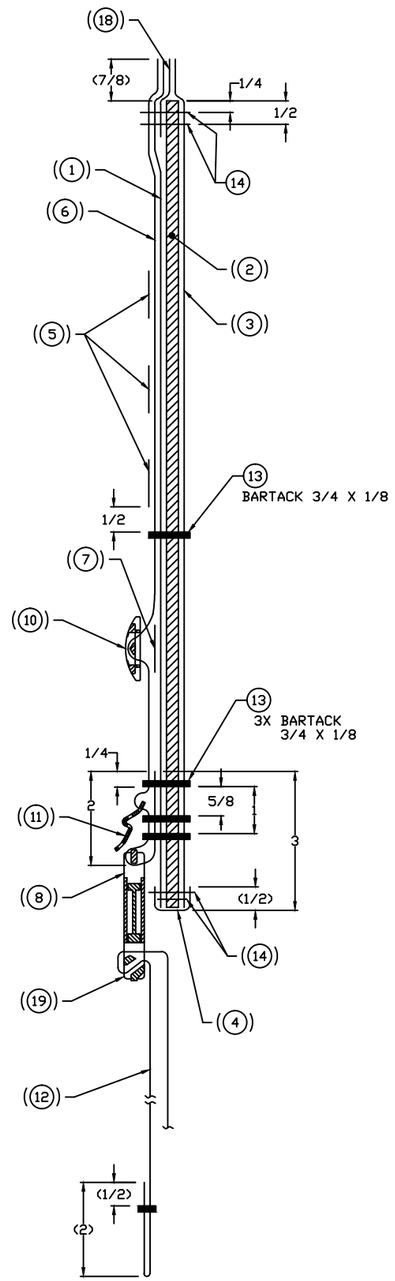

SECTION A-A 1 FIG 6
2X

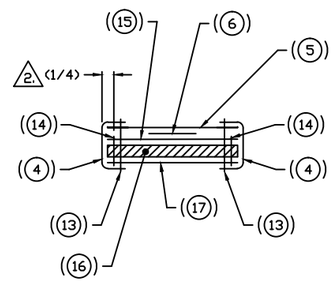

SECTION B-B 1 FIG 5
6X

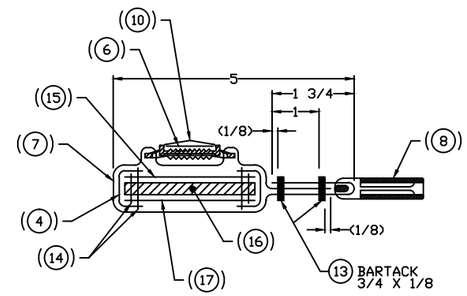

SECTION C-C 1 FIG 5
ROTATED CCW

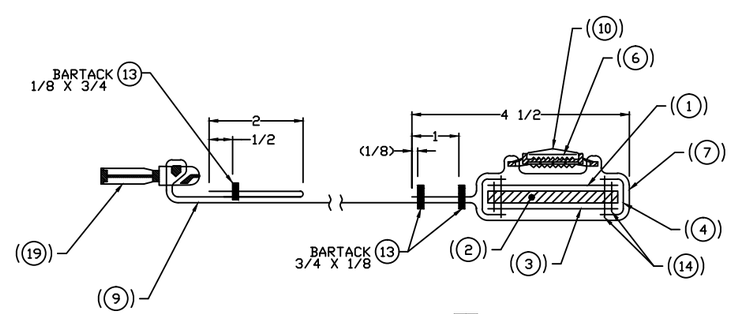

SECTION D-D 1 FIG 3
ROTATED CW

DISTRIBUTION STATEMENT A
THIS DOCUMENT IS APPROVED FOR PUBLIC RELEASE; DISTRIBUTION IS UNLIMITED.

SIZE	CAGE	DRAWING NO.
E	81337	2-6-0898
SCALE 1/1	UNIT WT.	SHEET 2

G:\Drafting11\marine corp pack\2-6-0898s2.dwg