REVISIONS				
REV	DESCRIPTION	PROJ OFCR	APVD	DATE
–	INITIAL RELEASE PER DR-S-010-11	T.S.	T.S.	11-05-20

THIS DRAWING HAS BEEN GENERATED AND IS MAINTAINED BY A CAD SYSTEM. CHANGES SHALL ONLY BE INCORPORATED AS DIRECTED BY THE DESIGN ACTIVITY.

1. REFER TO PURCHASE DESCRIPTION, FAMILY OF IMPROVED LOAD BEARING EQUIPMENT DATED 10 MAY 2011

2. CUT LENGTHS ARE FOR REFERENCE ONLY

DISTRIBUTION STATEMENT A

THIS DOCUMENT IS APPROVED FOR PUBLIC RELEASE; DISTRIBUTION IS UNLIMITED.

REV LEVEL	–	–	–													
SHEET NO.	1	2	3													

REVISION STATUS OF SHEETS

INTERPRET THIS DRAWING IN ACCORDANCE WITH ASME Y14.100

UNLESS OTHERWISE SPECIFIED:
DIMENSIONS ARE IN INCHES
TOLERANCES:
ANGLES ±
FRACTIONS ±
2 PLACE DIM ± NA
3 PLACE DIM ±

DATE	11-05-18
DRAWN BY	E. TAMSKY
CHECKED	K. VARNEY
PROJ OFCR	T. SCOTT
APPROVED	K. RYAN
APPROVAL DESIGN ACTIVITY	J. CONNOR
APPLICABLE SPEC	

U.S. ARMY NATICK SOLDIER RESEARCH, DEVELOPMENT & ENGINEERING CENTER
KANSAS STREET, NATICK MA. 01760-5056

ASSAULT POUCH, ASSEMBLY, USMC PACK

SIZE	CAGE	DRAWING NO.
A	81337	PL2-6-0889

SCALE: NONE | UNIT WT. | SHEET 1 OF 3

NEXT ASSY	USED ON
2-6-0900	2-6-0900

APPLICATION

PARTS LIST	U.S. ARMY NATICK SOLDIER RESEARCH, DEVELOPMENT & ENGINEERING CENTER KANSAS STREET, NATICK MA. 01760-5056	CAGE 81337	PL2-6-0889	REVISION LTR – DATE 11-05-20
LIST TITLE	ASSAULT POUCH, ASSEMBLY, USMC PACK		APPROVED T. S. / T. S.	REV AUTH NO. DR-S-010-11 / SHEET 2 OF ____ SHEETS

FIND NO.	QTY RQD -1	CAGE	DRAWING OR DOCUMENT NUMBER	DWG SIZE	PART OR IDENTIFYING NUMBER	NOMENCLATURE OR DESCRIPTION	MATERIAL SPECIFICATION
1	1		2-6-0922 (1.)		2-6-0922-3	PATTERN, FRONT PANEL	PARA 3.12.7.2
2	1		2-6-0922 (1.)		2-6-0922-1	PATTERN, BACK PANEL	PARA 3.12.7.2
3	2		2-6-0922 (1.)		2-6-0922-5	PATTERN, ZIPPER STRIP	PARA 3.12.7.2
4	1		2-6-0922 (1.)		2-6-0922-4	PATTERN, ZIPPER PANEL	PARA 3.12.7.2
5	1		2-6-0922 (1.)		2-6-0922-2	PATTERN, BACK PANEL INNER POCKET	PARA 3.12.7.2
6	2		2-6-0922 (1.)		2-6-0922-8	WEBBING, 1" WIDE, HORIZONTAL, CUT LENGTH 11 1/2" (2.)	PARA 3.12.4.1
7	4		2-6-0922 (1.)		2-6-0922-7	WEBBING, 1" WIDE, VERTICAL, CUT LENGTH 11 1/2" (2.)	PARA 3.12.4.1
8	1		2-6-0922 (1.)		2-6-0922-9	WEBBING, 1" WIDE, INSIDE, CUT LENGTH 11 1/2" (2.)	PARA 3.12.4.1
9	AR		(1.)			TAPE, BINDING, 1" WIDE	PARA 3.12.4.5

PARTS LIST	U.S. ARMY NATICK SOLDIER RESEARCH, DEVELOPMENT & ENGINEERING CENTER KANSAS STREET, NATICK MA. 01760-5056	CAGE 81337	PL2-6-0889	REVISION LTR – DATE 11-05-20
LIST TITLE	ASSAULT POUCH, ASSEMBLY, USMC PACK		APPROVED T. S. / T. S.	REV AUTH NO. DR-S-010-11 / SHEET 3 OF ____ SHEETS

FIND NO.	QTY RQD –1	CAGE	DRAWING OR DOCUMENT NUMBER	DWG SIZE	PART OR IDENTIFYING NUMBER	NOMENCLATURE OR DESCRIPTION	MATERIAL SPECIFICATION
10			DELETED		DELETED		
11	1		1.			FASTENER, SLIDE, 2. CUT LENGTH 18"	PARA 3.12.9.9
12	2		1.			CORD, CUT LENGTH 9" 2.	PARA 3.12.10.3
13	1		1.			GROMMET	PARA 3.12.1.6.1
14	4		1.			SNAP FASTENER	PARA 3.12.1.5.1
15	4		1.			STIFFENER, PLASTIC, 2. CUT SIZE 4 1/4"	PARA 3.12.3.5
16	AR		1.			THREAD, SIZE E	PARA 3.12.8.2
17	AR		1.			THREAD, SIZE F	PARA 3.12.8.1
18	1		1.			CORD, CUT LENGTH 4 1/2" 2.	PARA 3.12.10.3
19	1	81337	2-6-0904	D	2-6-0904-1	IDENTIFICATION & INSTRUCTION LABEL	PARA 3.25

REVISIONS					
ZONE	LTR	DESCRIPTION	PROJ DFCR	APVD	DATE
	-	INITIAL RELEASE PER DR-S-010-11	T. S.	T. S.	11-05-20

THIS DRAWING HAS BEEN GENERATED AND IS MAINTAINED BY A CAD SYSTEM. CHANGES SHALL ONLY BE INCORPORATED AS DIRECTED BY THE DESIGN ACTIVITY.

NOTES:

1. WORKMANSHIP, CONSTRUCTION, STITCHING AND QUALITY ASSURANCE PROVISIONS SHALL CONFORM TO PURCHASE DESCRIPTION, FAMILY OF IMPROVED. LOAD BEARING EQUIPMENT DATED 10 MAY 2011.
2. ALL STITCHING SHALL BE BACKSTITCHED NOT LESS THAN 1/2 INCH UNLESS TURNED UNDER BY A HEM OR HELD BY OTHER STITCHING.
3. ALL STITCHING TO BE 1/8 INCH FROM EDGE OR APART, UNLESS OTHERWISE SPECIFIED.
4. UNLESS OTHERWISE SPECIFIED ALL FOLDS, HEMS, AND TURN UNDERS SHALL BE 3/8".
5. UNLESS OTHERWISE SPECIFIED, TOLERANCES SHALL BE AS FOLLOWS:
   1/8 INCH OR MORE BUT LESS THAN 2 INCHES --- ±1/16
   2 INCHES OR MORE BUT LESS THAN 10 INCHES -- ±1/8
   10 INCHES OR MORE BUT LESS THAN 36 INCHES - ±1/4
   36 INCHES OR MORE ---------- ±3/8
6. SEAR ALL ENDS OF WEBBING AND TAPE TO PREVENT FRAYING. AVOID FORMING SHARP EDGES.
7. LOCATE FN 19, LABEL, APPROXIMATELY AS SHOWN.

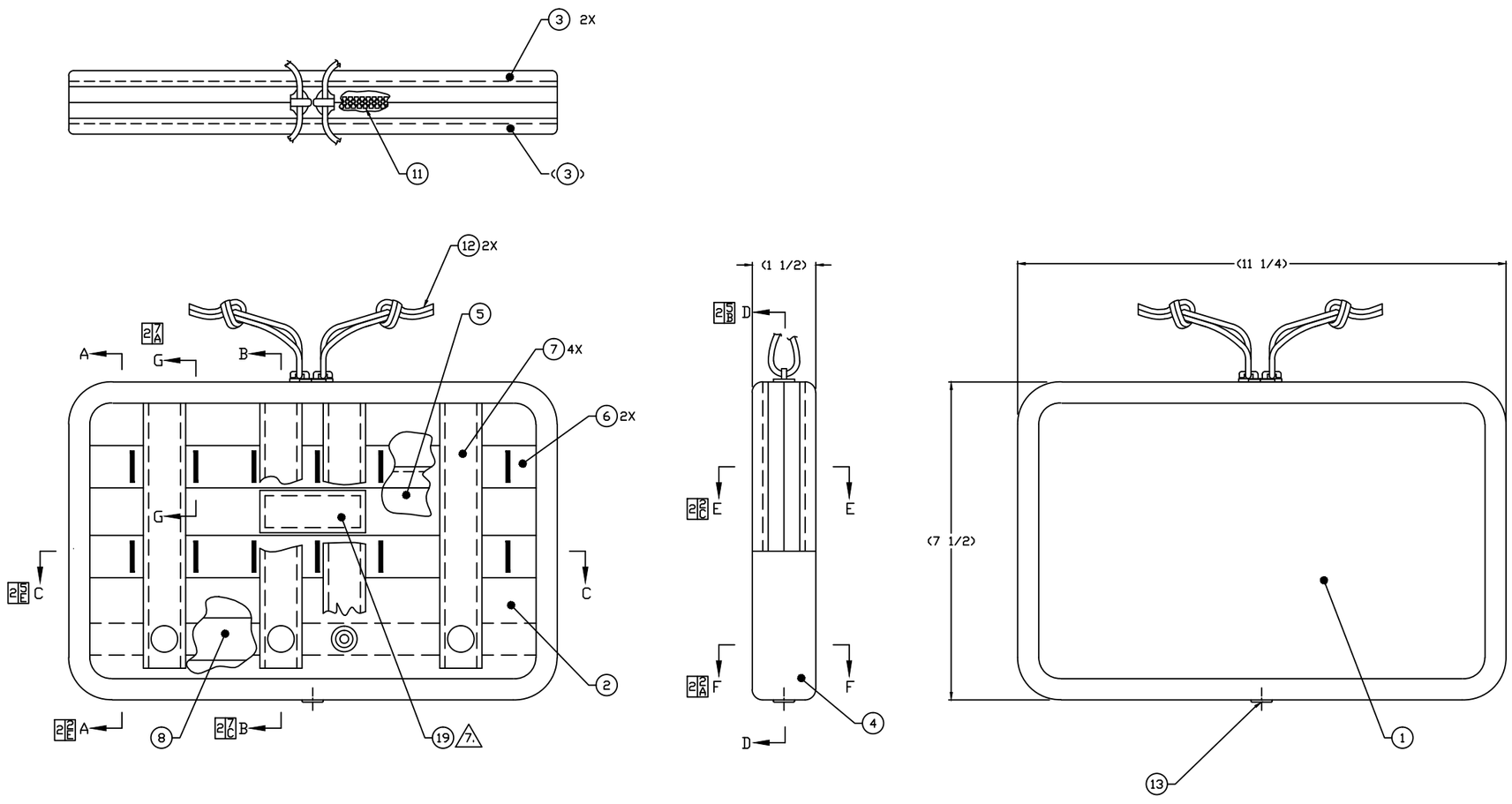

-1

SEE SEPARATE PARTS LIST

DISTRIBUTION STATEMENT A
THIS DOCUMENT IS APPROVED FOR PUBLIC RELEASE; DISTRIBUTION IS UNLIMITED.

REVISION STATUS OF SHEETS		
-	-	REVISION
2	1	SHEET

INTERPRET THIS DRAWING IN ACCORDANCE WITH ASME Y14.100

UNLESS OTHERWISE SPECIFIED DIMENSIONS ARE IN INCHES
TOLERANCES:
ANGLES ±
FRACTIONS ±
2 PLACE DIM ±
3 PLACE DIM ±
5.

NEXT ASSY	USED ON
2-6-0894	2-6-0894
APPLICATION	

DATE 11-05-18
DRAWN BY E. TAMSKY
CHECKED K. VARNEY
PROJ DFCR T. SCOTT
APPROVED K. RYAN
APPROVAL DESIGN ACTIVITY J. CONNOR
APPLICABLE SPEC -

U.S. ARMY NATICK SOLDIER RESEARCH, DEVELOPMENT & ENGINEERING CENTER
KANSAS STREET, NATICK MA. 01760-5056

ASSAULT POUCH, ASSEMBLY, USMC PACK

SIZE E | CAGE 81337 | DRAWING NO. 2-6-0889
SCALE 1/1 | UNIT WT. | SHEET 1 OF 2

PART NO. 2-6-0889 REV 1

REVISIONS					
ZONE	LTR	DESCRIPTION	PROJ DFCR	APVD	DATE
	-	INITIAL RELASE PER DR-S-010-11	T. S.	T. S.	11-05-20

THIS DRAWING HAS BEEN GENERATED AND IS MAINTAINED BY A CAD SYSTEM. CHANGES SHALL ONLY BE INCORPORATED AS DIRECTED BY THE DESIGN ACTIVITY.

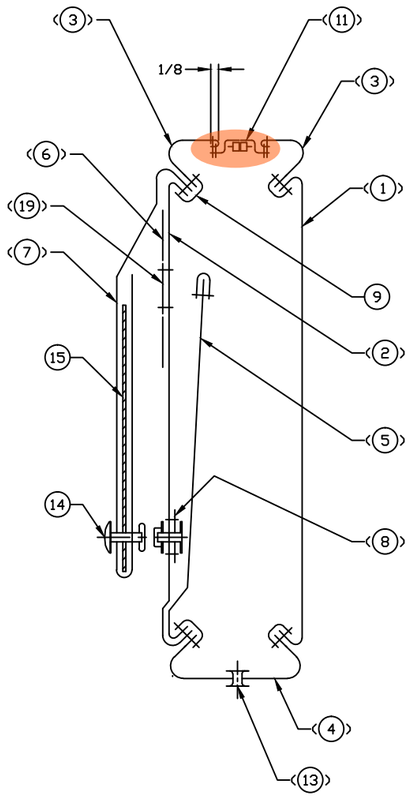

SECTION B-B 1/8
4X, SCALE: NONE

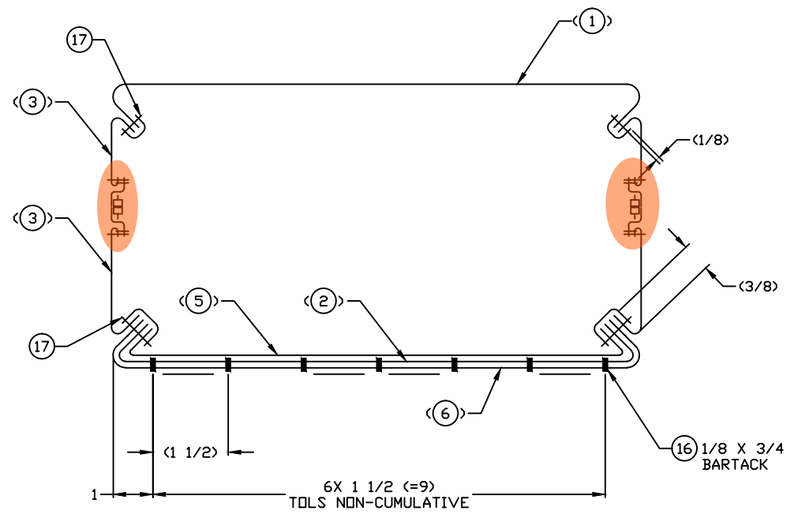

SECTION C-C 1/8

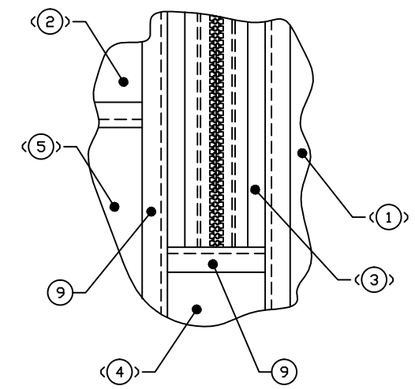

PARTIAL VIEW
A-A 1/8

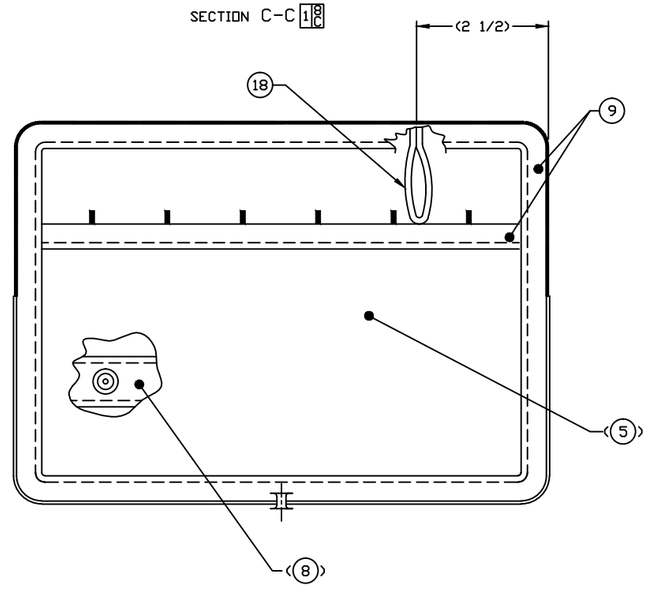

VIEW D-D 1/5

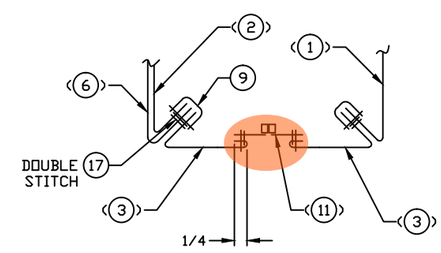

SECTION E-E 1/5

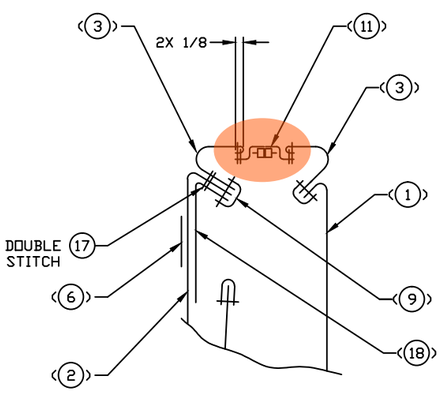

SECTION G-G 1/6

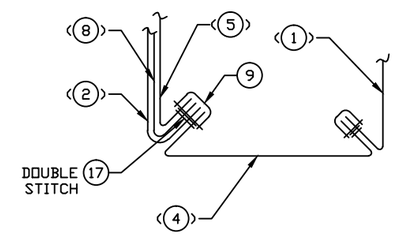

SECTION F-F 1/5

DISTRIBUTION STATEMENT A
THIS DOCUMENT IS APPROVED FOR PUBLIC RELEASE; DISTRIBUTION IS UNLIMITED.

SIZE	CAGE	DRAWING NO.
E	81337	2-6-0889
SCALE 1:1	UNIT WT.	SHEET 2

2-6-0889 SHT 2