REVISIONS

REV	DESCRIPTION	PROJ OFCR	APVD	DATE
–	INITIAL RELEASE PER DR-S-010-11	T.S.	T.S	11/05/20

THIS DRAWING HAS BEEN GENERATED AND IS MAINTAINED BY A CAD SYSTEM. CHANGES SHALL ONLY BE INCORPORATED AS DIRECTED BY THE DESIGN ACTIVITY.

1. REFER TO PURCHASE DESCRIPTION, FAMILY OF IMPROVED LOAD BEARING EQUIPMENT, DATED 10 MAY 2011.

2. CUT LENGTHS ARE FOR REFERENCE ONLY

DISTRIBUTION STATEMENT A

THIS DOCUMENT IS APPROVED FOR PUBLIC RELEASE; DISTRIBUTION IS UNLIMITED.

REV LEVEL	–	–	–													
SHEET NO.	1	2	3													

REVISION STATUS OF SHEETS

INTERPRET THIS DRAWING IN ACCORDANCE WITH ASME Y14.100

UNLESS OTHERWISE SPECIFIED:
DIMENSIONS ARE IN INCHES
TOLERANCES:
ANGLES ±
FRACTIONS ±
2 PLACE DIM ± NA
3 PLACE DIM ±

DATE	11-05-17
DRAWN BY	C. KRIKORIAN
CHECKED	K. VARNEY
PROJ OFCR	T. SCOTT
APPROVED	T. SCOTT
APPROVAL DESIGN ACTIVITY	T. SCOTT
APPLICABLE SPEC	

U.S. ARMY NATICK SOLDIER RESEARCH, DEVELOPMENT & ENGINEERING CENTER
KANSAS STREET, NATICK MA. 01760-5056

HYDRATION POUCH, ASSEMBLY, USMC PACK

SIZE	CAGE	DRAWING NO.
A	81337	PL2-6-0887

SCALE: NONE | UNIT WT. | SHEET 1 OF 3

2-6-0894	2-6-0894
NEXT ASSY	USED ON
APPLICATION	

PARTS LIST	U.S. ARMY NATICK SOLDIER RESEARCH, DEVELOPMENT & ENGINEERING CENTER KANSAS STREET, NATICK MA. 01760-5056	CAGE 81337	PL2-6-0887	REVISION LTR – DATE 11/05/20
LIST TITLE HYDRATION POUCH ASSEMBLY, USMC PACK			APPROVED T. S. T. S.	REV AUTH NO. DR-S-010-11 / SHEET 2 OF ____ SHEETS

FIND NO.	QTY RQD -1	CAGE	DRAWING OR DOCUMENT NUMBER	DWG SIZE	PART OR IDENTIFYING NUMBER	NOMENCLATURE OR DESCRIPTION	MATERIAL SPECIFICATION
1	1		2-6-0921 (1.)		2-6-0921-4	PATTERN, BAG, MAIN	PARA 3.12.7.2
2	1		2-6-0921 (1.)		2-6-0921-8	PATTERN, BOTTOM	PARA 3.12.7.2
3	1		2-6-0921 (1.)		2-6-0921-9	PATTERN, BACK PANEL	PARA 3.12.7.2
4	AR		(1.)			TAPE, BINDING, 1" WIDE	PARA 3.12.4.5
5	1		(1.)			ONE INCH MALE SIDE RELEASE BUCKLE	PARA 3.12.1.2.10
6	1		(1.)			ONE INCH FEMALE SIDE RELEASE BUCKLE	PARA 3.12.1.2.16
7	1		(1.)			GROMMET	PARA 3.12.1.6.1
8	1		2-6-0921 (1.)		2-6-0921-2	WEBBING, 1" WIDE, (2.) FLAP BUCKLE, CUT LENGTH 5"	PARA 3.12.4.1
9	1		2-6-0921 (1.)		2-6-0921-1	WEBBING, 1" WIDE, BAG MAIN (2.) BUCKLE, CUT LENGTH 9"	PARA 3.12.4.1
10	1		2-6-0921 (1.)		2-6-0921-5	WEBBING, 3/4" WIDE, (2.) INSIDE FLAP, CUT LENGTH 2"	PARA 3.12.4.6
11	4		2-6-0921 (1.)		2-6-0921-7	WEBBING, 1" WIDE, (2.) STRAP, CUT LENGTH 8 3/4"	PARA 3.12.4.1

PARTS LIST	U.S. ARMY NATICK SOLDIER RESEARCH, DEVELOPMENT & ENGINEERING CENTER KANSAS STREET, NATICK MA. 01760-5056	CAGE 81337	PL2-6-0887	REVISION LTR – DATE 11/05/20
LIST TITLE HYDRATION POUCH ASSEMBLY, USMC PACK			APPROVED T. S. / T. S	REV AUTH NO. DR-S-010-11 / SHEET 3 OF ____ SHEETS

FIND NO.	QTY RQD – 1	CAGE	DRAWING OR DOCUMENT NUMBER	DWG SIZE	PART OR IDENTIFYING NUMBER	NOMENCLATURE OR DESCRIPTION	MATERIAL SPECIFICATION
12	4		2-6-0921 (1.)		2-6-0921-3	WEBBING, 1" WIDE, GUIDE, (2.) CUT LENGTH 2 1/4"	PARA 3.12.4.1
13	1		(1.)			CORD, CUT LENGTH 4 3/4" (2.)	PARA 3.12.10.3
14	4		(1.)			SNAP FASTENER	PARA 3.12.1.5.1
15	AR		(1.)			THREAD, SIZE E	PARA 3.12.8.2
16	4		2-6-0921 (1.)		2-6-0921-6	WEBBING, 1" WIDE, INSIDE (2.) REINFORCEMENT, CUT LENGTH 2"	PARA 3.12.4.1
17	AR		(1.)			THREAD, SIZE F	PARA 3.12.8.1
18	4		(1.)			STIFFENER, PLASTIC, (2.) CUT LENGTH 3"	PARA 3.12.3.5
19	1	81337	2-6-0904	D	2-6-0904-1	IDENTIFICATION & INSTRUCTION LABEL	PARA 3.25

NOTES:

1. WORKMANSHIP, CONSTRUCTION, STITCHING AND QUALITY ASSURANCE PROVISIONS SHALL CONFORM TO PURCHASE DESCRIPTION, FAMILY OF IMPROVED. LOAD BEARING EQUIPMENT DATED 10 MAY 2011.
2. ALL STITCHING SHALL BE BACKSTITCHED NOT LESS THAN 1/2 INCH UNLESS TURNED UNDER BY A HEM OR HELD BY OTHER STITCHING.
3. ALL STITCHING TO BE 1/8 INCH FROM EDGE OR APART, UNLESS OTHERWISE SPECIFIED.
4. SEAR ALL ENDS OF WEBBING AND TAPE TO PREVENT FRAYING. AVOID FORMING SHARP EDGES.
5. UNLESS OTHERWISE SPECIFIED, TOLERANCES SHALL BE AS FOLLOWS:
   1/8 INCH OR MORE BUT LESS THAN 2 INCHES --- ±1/16
   2 INCHES OR MORE BUT LESS THAN 10 INCHES -- ±1/8
   10 INCHES OR MORE BUT LESS THAN 36 INCHES - ±1/4
   36 INCHES OR MORE ---------- ±3/8
6. UNLESS OTHERWISE SPECIFIED ALL FOLDS, HEMS, AND TURN UNDERS SHALL BE 3/8".
7. LOCATE FN 19, LABEL, APPROXIMATELY AS SHOWN.

REVISIONS					
ZONE	LTR	DESCRIPTION	PROJ OFCR	APVD	DATE
	-	INITIAL RELEASE PER DR-S-010-11	T. S.	T. S.	11-05-20

THIS DRAWING HAS BEEN GENERATED AND IS MAINTAINED BY A CAD SYSTEM. CHANGES SHALL ONLY BE INCORPORATED AS DIRECTED BY THE DESIGN ACTIVITY.

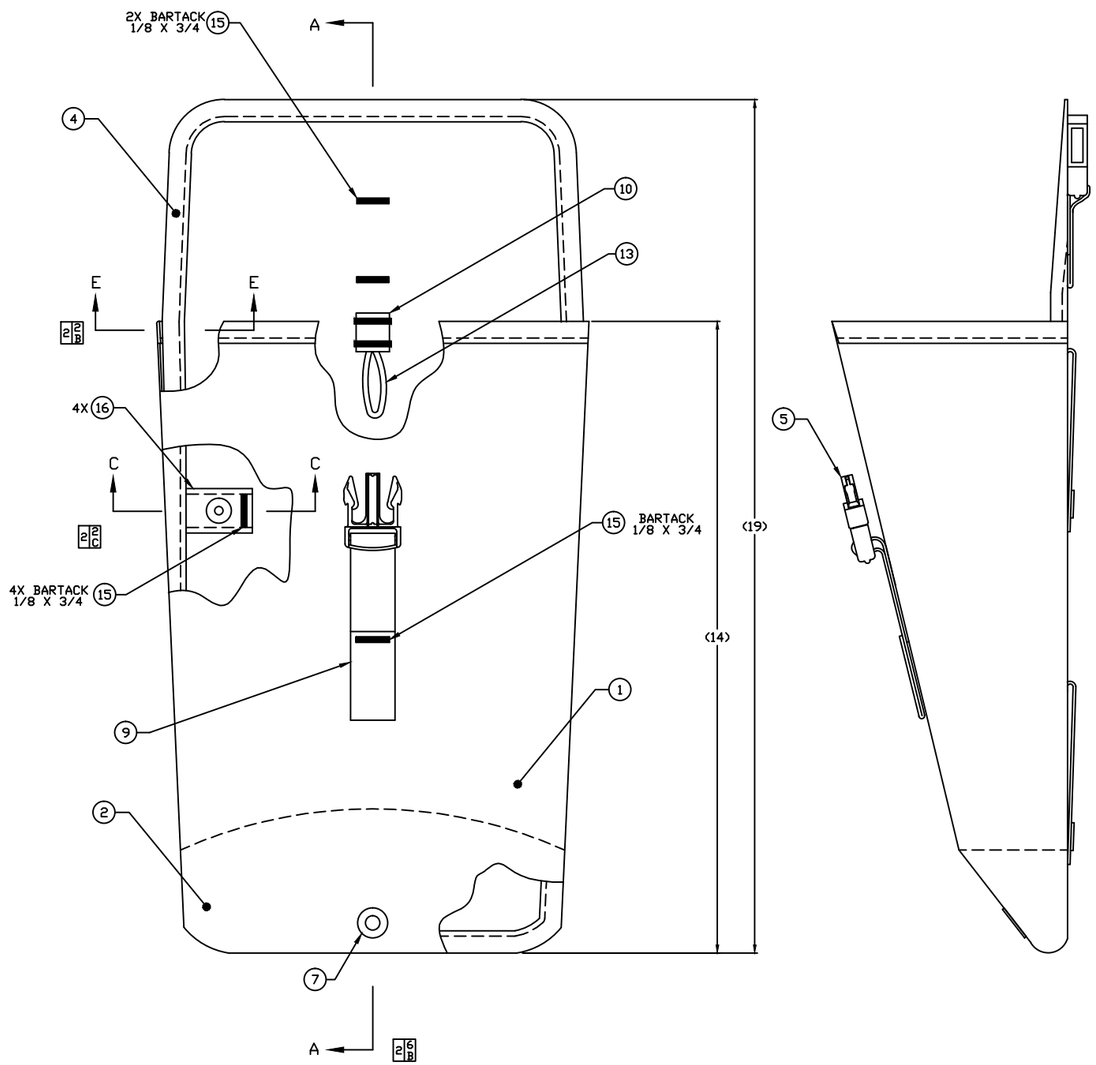

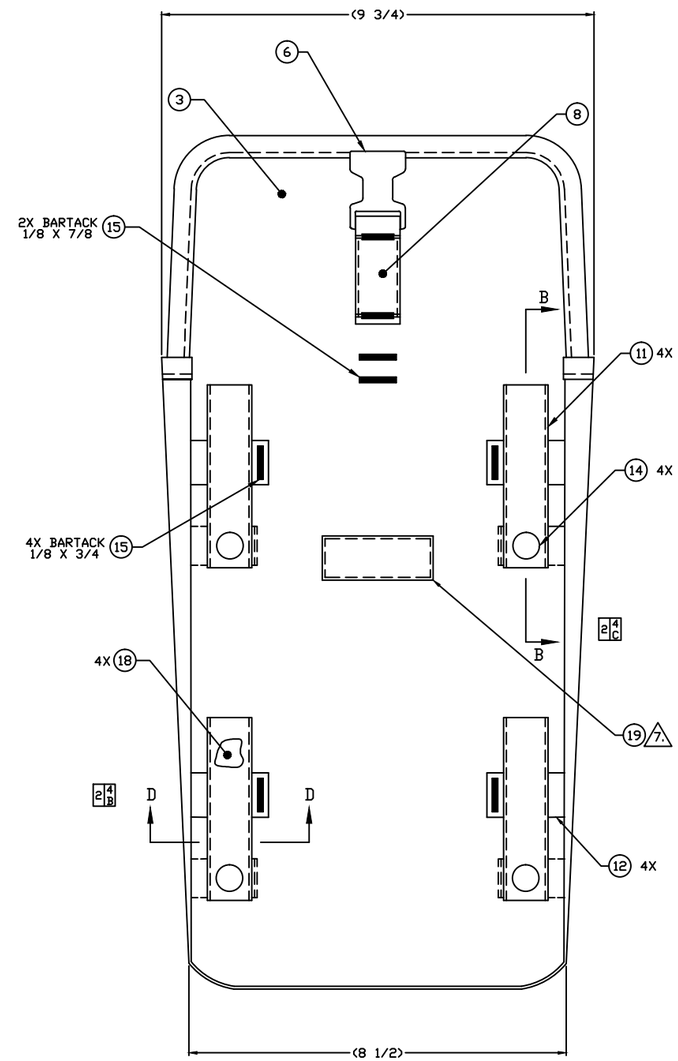

SEE SEPARATE PARTS LIST

-1

DISTRIBUTION STATEMENT A
THIS DOCUMENT IS APPROVED FOR PUBLIC RELEASE; DISTRIBUTION IS UNLIMITED.

REVISION STATUS OF SHEETS		
-	-	REVISION
2	1	SHEET

INTERPRET THIS DRAWING IN ACCORDANCE WITH ASME Y14.100

NEXT ASSY	USED ON
2-6-0894	2-6-0894
APPLICATION	

UNLESS OTHERWISE SPECIFIED DIMENSIONS ARE IN INCHES TOLERANCES: ANGLES ±, FRACTIONS ±, 2 PLACE DIM ±, 3 PLACE DIM ± (5.)

DATE 11-05-17
DRAWN BY C. KRIKORIAN
CHECKED F. W. K.
PROJ OFCR T. SCOTT
APPROVED K. RYAN
APPROVAL DESIGN ACTIVITY J. CONNOR
APPLICABLE SPEC -

U.S. ARMY NATICK SOLDIER RESEARCH, DEVELOPMENT & ENGINEERING CENTER
KANSAS STREET, NATICK MA. 01760-5056

HYDRATION POUCH ASSEMBLY, USMC PACK

SIZE	CAGE	DRAWING NO.
E	81337	2-6-0887

SCALE: 1/1 | UNIT WT. | SHEET 1 OF 2

2-6-0887 1

REVISIONS					
ZONE	LTR	DESCRIPTION	PROJ DFCR	APVD	DATE
	-	INITIAL RELEASE PER DR-S-010-11	T. S.	X. X.	11-05-20

THIS DRAWING HAS BEEN GENERATED AND IS MAINTAINED BY A CAD SYSTEM. CHANGES SHALL ONLY BE INCORPORATED AS DIRECTED BY THE DESIGN ACTIVITY.

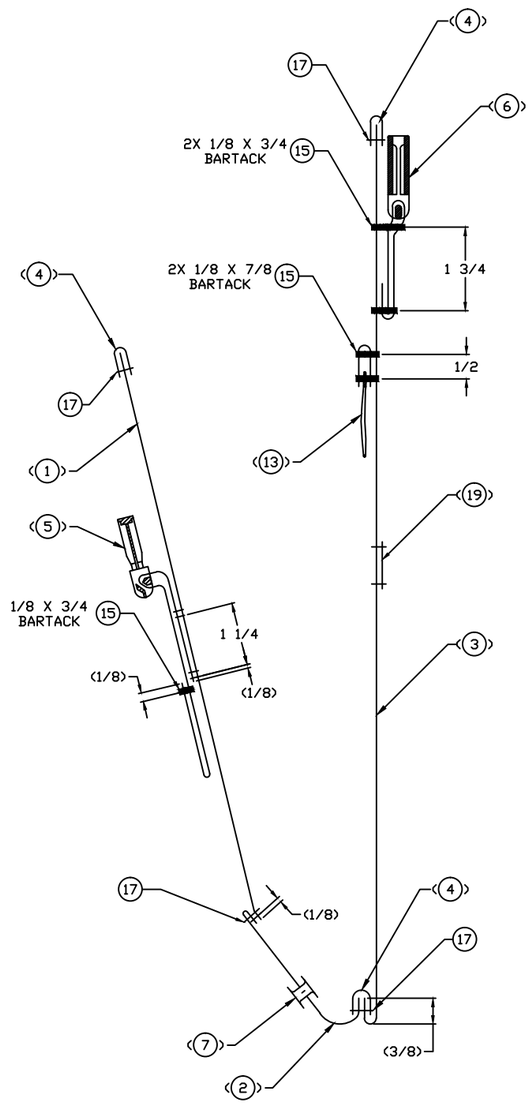

SECTION A-A

1 7 A

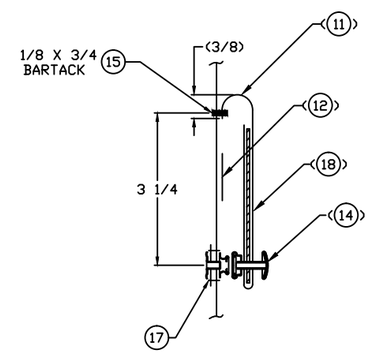

SECTION B-B

4X

1 1 D

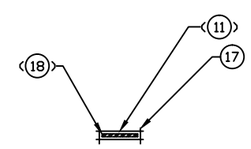

SECTION D-D

4X

1 3 C

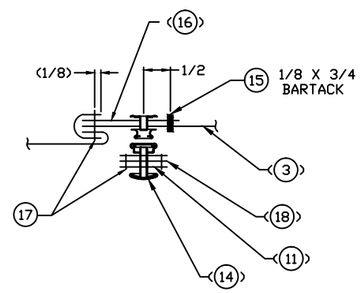

SECTION C-C

4X

2X AS SHOWN

2X OPPOSITE HAND

1 8 D

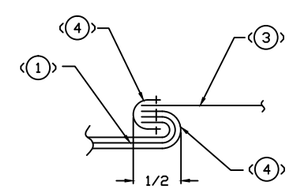

SECTION E-E

2X

1 8 C

DWG NO. 2-6-0877 SHT 2

DISTRIBUTION STATEMENT A

THIS DOCUMENT IS APPROVED FOR PUBLIC RELEASE; DISTRIBUTION IS UNLIMITED.

SIZE	CAGE	DRAWING NO.
E	81337	2-6-0877
SCALE 1/1	UNIT WT.	SHEET 2