REVISIONS				
REV	DESCRIPTION	PROJ OFCR	APVD	DATE
–	INITIAL RELEASE PER DR-S-010-11	T.S.	T.S.	11-05-20

THIS DRAWING HAS BEEN GENERATED AND IS MAINTAINED BY A CAD SYSTEM. CHANGES SHALL ONLY BE INCORPORATED AS DIRECTED BY THE DESIGN ACTIVITY.

1. REFER TO PURCHASE DESCRIPTION, FAMILY OF IMPROVED LOAD BEARING EQUIPMENT, DATED 10 MAY 2011.

2. CUT LENGTHS ARE FOR REFERENCE ONLY

DISTRIBUTION STATEMENT A

THIS DOCUMENT IS APPROVED FOR PUBLIC RELEASE; DISTRIBUTION IS UNLIMITED.

REV LEVEL	–	–	–													
SHEET NO.	1	2	3													

REVISION STATUS OF SHEETS

INTERPRET THIS DRAWING IN ACCORDANCE WITH ASME Y14.100

UNLESS OTHERWISE SPECIFIED:
DIMENSIONS ARE IN INCHES
TOLERANCES:
ANGLES ±
FRACTIONS ±
2 PLACE DIM ± NA
3 PLACE DIM ±

DATE 11-05-20

DRAWN BY	E. TAMSKY
CHECKED	K. VARNEY
PROJ OFCR	T. SCOTT
APPROVED	K. RYAN
APPROVAL DESIGN ACTIVITY	J. CONNOR
APPLICABLE SPEC	

U.S. ARMY NATICK SOLDIER RESEARCH, DEVELOPMENT & ENGINEERING CENTER
KANSAS STREET, NATICK MA. 01760-5056

HIP BELT ASSEMBLY, USMC PACK

NEXT ASSY	USED ON
2-6-0894	2-6-0894

APPLICATION

SIZE	CAGE	DRAWING NO.
A	81337	PL2-6-0890

SCALE: NONE | UNIT WT. | SHEET 1 OF 3

PARTS LIST	U.S. ARMY NATICK SOLDIER RESEARCH, DEVELOPMENT & ENGINEERING CENTER KANSAS STREET, NATICK MA. 01760-5056	CAGE 81337	PL2-6-0890	REVISION LTR – DATE 11/05/20
LIST TITLE	HIP BELT ASSEMBLY, USMC PACK		APPROVED T. S. / T. S.	REV AUTH NO. DR-S-010-11 / SHEET 2 OF ____ SHEETS

FIND NO.	QTY RQD -1	CAGE	DRAWING OR DOCUMENT NUMBER	DWG SIZE	PART OR IDENTIFYING NUMBER	NOMENCLATURE OR DESCRIPTION	MATERIAL SPECIFICATION
1	1		1.			FOAM, MOLDED HIP BELT	PARA 3.12.2.5
2	1		2-6-0923 1.		2-6-0923-1	PATTERN, MAIN	PARA 3.12.7.2 CLOTH, NYLON, 500D
3	2		2-6-0923 1.		2-6-0923-4	PATTERN, BACK COVER	PARA 3.12.7.2 CLOTH, NYLON, 500D
4	1		2-6-0923 1.		2-6-0923-2	PATTERN, INNER PLASTIC	PARA 3.12.3.3
5	2		2-6-0923 1.		2-6-0923-7	PATTERN, BACK PLASTIC	PARA 3.12.3.3
6	2		2-6-0923 1.		2-6-0923-15	WEBBING, 2" WIDE, 2. CUT LENGTH 10"	PARA 3.12.4.3
7	2		2-6-0923 1.		2-6-0923-14	WEBBING, 2" WIDE, 2. CUT LENGTH 21 1/2"	PARA 3.12.4.3
8	4		2-6-0923 1.		2-6-0923-10	WEBBING, 1" WIDE, 2. CUT LENGTH 17 1/2"	PARA 3.12.4.1
9	1		2-6-0923 1.		2-6-0923-13	WEBBING, 1" WIDE, 2. CUT LENGTH 20"	PARA 3.12.4.1
10	2		2-6-0923 1.		2-6-0923-12	WEBBING, 1" WIDE, 2. CUT LENGTH 16"	PARA 3.12.4.1

PARTS LIST	U.S. ARMY NATICK SOLDIER RESEARCH, DEVELOPMENT & ENGINEERING CENTER KANSAS STREET, NATICK MA. 01760-5056	CAGE 81337	PL2-6-0890	REVISION LTR – DATE 11/05/20
LIST TITLE HIP BELT ASSEMBLY, USMC PACK			APPROVED T. S. / T. S.	REV AUTH NO. DR-S-010-11 / SHEET 3 OF ____ SHEETS

FIND NO.	QTY RQD -1	CAGE	DRAWING OR DOCUMENT NUMBER	DWG SIZE	PART OR IDENTIFYING NUMBER	NOMENCLATURE OR DESCRIPTION	MATERIAL SPECIFICATION
11	1		2-6-0923 (1.)		2-6-0923-8	WEBBING, 1" WIDE, (2.) CUT LENGTH 16"	PARA 3.12.4.1
12	1		2-6-0923 (1.)		2-6-0923-9	WEBBING, 1" WIDE, (2.) CUT LENGTH 6 1/2"	PARA 3.12.4.1
13	AR		(1.)			TAPE, BINDING, 1" WIDE	PARA 3.12.4.5
14	1		(1.)			BUCKLE, SIDE RELEASE, 2"	PARA 3.12.1.2.17
15	4		(1.)			BUCKLE, LOCK, 1"	PARA 3.12.1.9.7
16	AR		(1.)			THREAD, SIZE F	PARA 3.12.8.1
17	AR		(1.)			THREAD, SIZE E	PARA 3.12.8.2
18	2		(1.)			BUCKLE, LOCK, 2"	PARA 3.12.1.9.5
19	4		(1.)			RING, OVAL	PARA 3.12.1.8.1
20	1		2-6-0923 (1.)		2-6-0923-3	PATTERN, CENTER PAD	PARA 3.12.7.2 CLOTH, NYLON, 500D
21	1		2-6-0923 (1.)		2-6-0923-5	FOAM, CENTER PAD, 1/4"	PARA 3.12.2.6
22	1		2-6-0923 (1.)		2-6-0923-6	FOAM, CENTER PAD, 1"	PARA 3.12.2.7
23	1		2-6-0923 (1.)		2-6-0923-11	WEBBING, 2" WIDE, FOLDED, (2.) CUT LENGTH 11 1/2"	PARA 3.12.4.3
24	1	81337	2-6-0904	D	2-6-0904-1	IDENTIFICATION & INSTRUCTION LABEL	PARA 3.25

REVISIONS					
ZONE	LTR	DESCRIPTION	PROJ OFCR	APVD	DATE
	-	INITIAL RELEASE PER DR-S-010-11	T. S.	T. S.	11-05-20

THIS DRAWING HAS BEEN GENERATED AND IS MAINTAINED BY A CAD SYSTEM. CHANGES SHALL ONLY BE INCORPORATED AS DIRECTED BY THE DESIGN ACTIVITY.

NOTES:

1. WORKMANSHIP, CONSTRUCTION, STITCHING AND QUALITY ASSURANCE PROVISIONS SHALL CONFORM TO PURCHASE DESCRIPTION, FAMILY OF IMPROVED. LOAD BEARING EQUIPMENT DATED 10 MAY 2011.
2. TO BE STITCHED TWICE IN SAME SPOT, STITCH SHOWN OFFSET FOR CLARITY ONLY.
3. ALL STITCHING SHALL BE BACKSTITCHED NOT LESS THAN 1/2 INCH UNLESS TURNED UNDER BY A HEM OR HELD BY OTHER STITCHING.
4. ALL STITCHING TO BE 1/8 INCH FROM EDGE OR APART, UNLESS OTHERWISE SPECIFIED.
5. UNLESS OTHERWISE SPECIFIED, TOLERANCES SHALL BE AS FOLLOWS:
   1/8 INCH OR MORE BUT LESS THAN 2 INCHES --- ±1/16
   2 INCHES OR MORE BUT LESS THAN 10 INCHES -- ±1/8
   10 INCHES OR MORE BUT LESS THAN 36 INCHES - ±1/4
   36 INCHES OR MORE ---------- ±3/8
6. SEAR ALL ENDS OF WEBBING AND TAPE TO PREVENT FRAYING. AVOID FORMING SHARP EDGES.
7. UNLESS OTHERWISE SPECIFIED ALL FOLDS, HEMS, AND TURN UNDERS SHALL BE 3/8".
8. LOCATE FN 24, LABEL, APPROXIMATELY AS SHOWN.

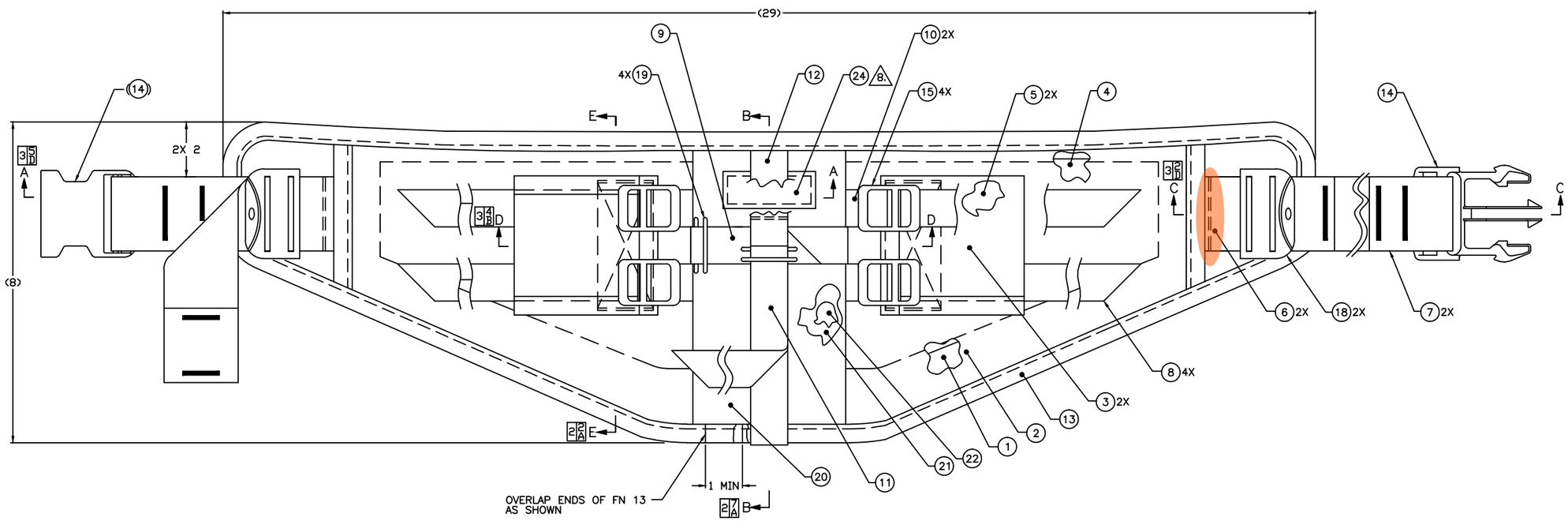

-1

OUTSIDE VIEW

SEE SEPARATE PARTS LIST

DISTRIBUTION STATEMENT A
THIS DOCUMENT IS APPROVED FOR PUBLIC RELEASE; DISTRIBUTION IS UNLIMITED.

REVISION STATUS OF SHEETS			
	-	-	-
	3	2	1
REVISION			
SHEET			

INTERPRET THIS DRAWING IN ACCORDANCE WITH ASME Y14.100

UNLESS OTHERWISE SPECIFIED DIMENSIONS ARE IN INCHES
TOLERANCES:
ANGLES ±
FRACTIONS ±
2 PLACE DIM ±
3 PLACE DIM ±
5.

APPLICATION	
2-6-0894	2-6-0894
NEXT ASSY	USED ON

DATE 11-05-01
DRAWN BY E. TAMSKY
CHECKED F. V. K.
PROJ OFCR T. SCOTT
APPROVED K. RYAN
APPROVAL DESIGN ACTIVITY J. CONNOR
APPLICABLE SPEC -

U.S. ARMY NATICK SOLDIER RESEARCH, DEVELOPMENT & ENGINEERING CENTER
KANSAS STREET, NATICK MA. 01760-5056

HIP BELT ASSEMBLY, USMC PACK

SIZE	CAGE	DRAWING NO.
E	81337	2-6-0890

SCALE: 1/1 UNIT WT. SHEET 1 OF 3

PART NO. 2-6-0890 SHT 1

REVISIONS					
ZONE	LTR	DESCRIPTION	PROJ DFCR	APVD	DATE
	-	INITIAL RELEASE PER DR-S-010-11	T. S.	T. S.	11-05-20

THIS DRAWING HAS BEEN GENERATED AND IS MAINTAINED BY A CAD SYSTEM. CHANGES SHALL ONLY BE INCORPORATED AS DIRECTED BY THE DESIGN ACTIVITY.

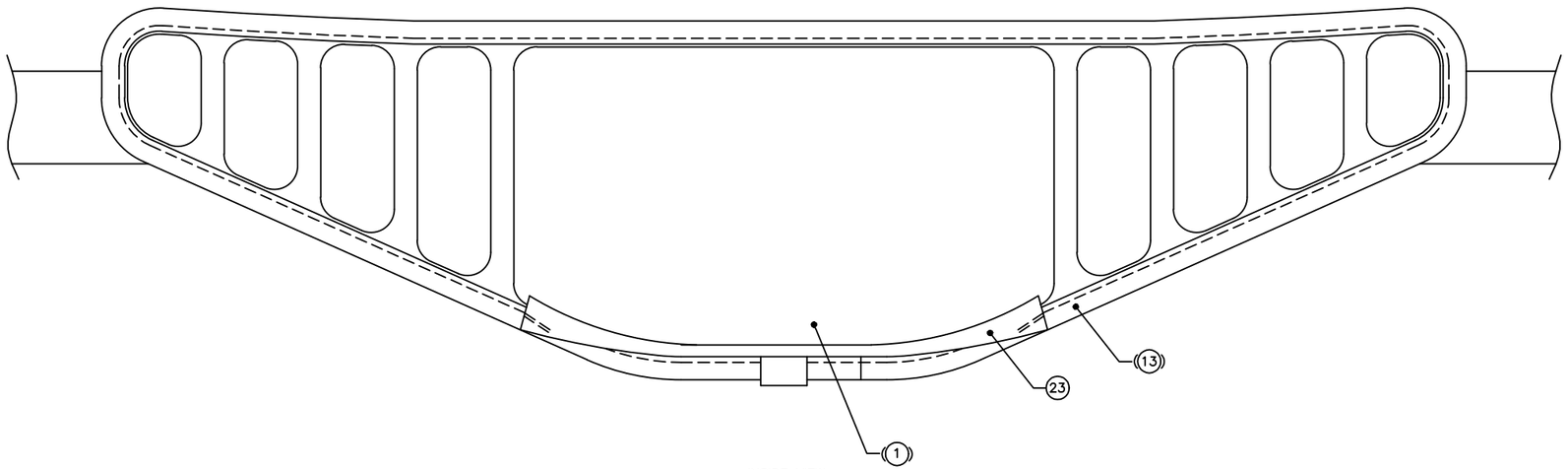

INSIDE VIEW

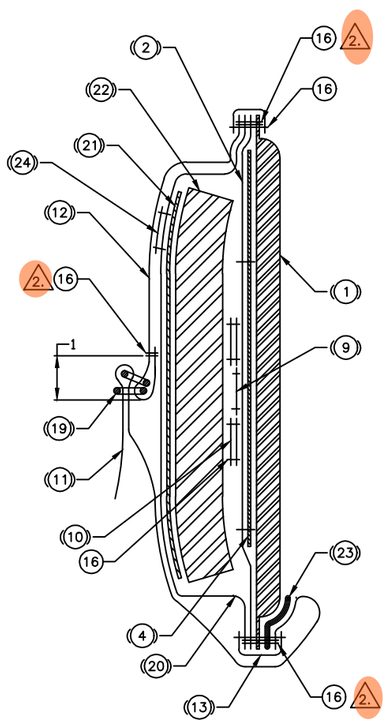

SECTION B-B 1 5 C

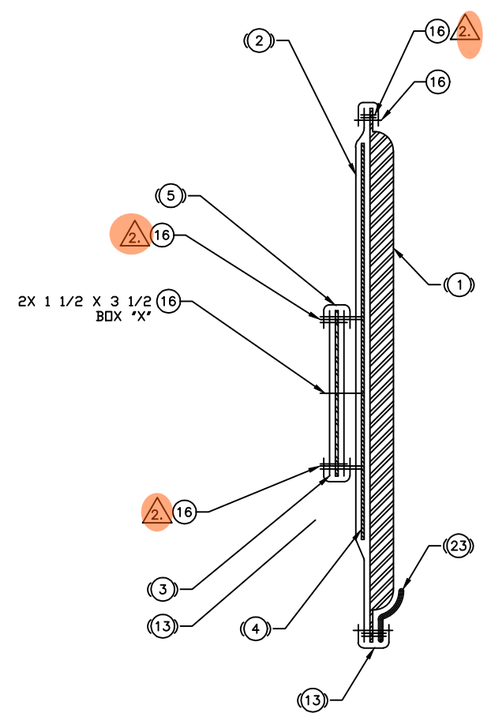

SECTION E-E 1 6 C

DISTRIBUTION STATEMENT A
THIS DOCUMENT IS APPROVED FOR PUBLIC RELEASE; DISTRIBUTION IS UNLIMITED.

SIZE	CAGE	DRAWING NO.
E	81337	2-6-0890
SCALE 1:1	UNIT WT.	SHEET 2

2-6-0890 SHT 2

REVISIONS					
ZONE	LTR	DESCRIPTION	PROJ DFCR	APVD	DATE
	-	INITIAL RELEASE PER DR-S-010-11	T. S.	T. S.	11-05-20

THIS DRAWING HAS BEEN GENERATED AND IS MAINTAINED BY A CAD SYSTEM. CHANGES SHALL ONLY BE INCORPORATED AS DIRECTED BY THE DESIGN ACTIVITY.

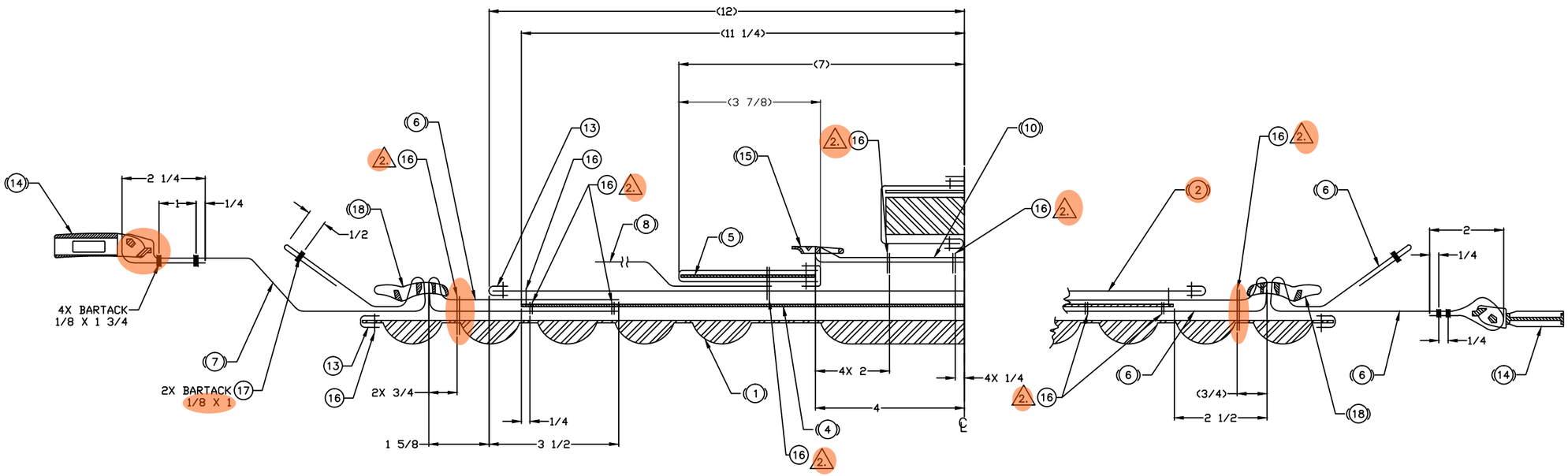

SECTION A-A 1 FIG

SECTION C-C 1 FIG

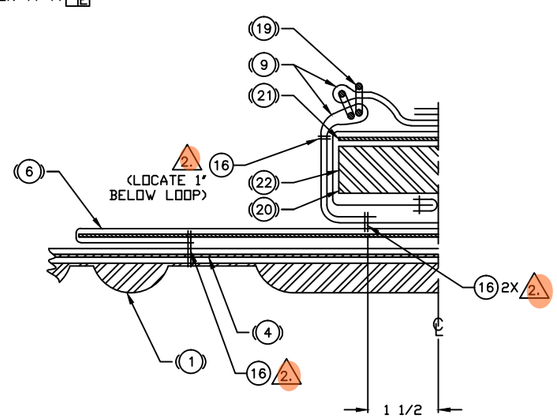

SECTION D-D 1 FIG

DISTRIBUTION STATEMENT A
THIS DOCUMENT IS APPROVED FOR PUBLIC RELEASE; DISTRIBUTION IS UNLIMITED.

SIZE	CAGE	DRAWING NO.
E	81337	2-6-0890
SCALE 1:1	UNIT WT.	SHEET 3

2-6-0890 3