REVISIONS				
REV	DESCRIPTION	PROJ OFCR	APVD	DATE
–	INITIAL RELEASE PER DR-S-010-11	T.S.	T.S.	11-05-20

THIS DRAWING HAS BEEN GENERATED AND IS MAINTAINED BY A CAD SYSTEM. CHANGES SHALL ONLY BE INCORPORATED AS DIRECTED BY THE DESIGN ACTIVITY.

1. REFER TO PURCHASE DESCRIPTION, FAMILY OF IMPROVED LOAD BEARING EQUIPMENT, DATED 10 MAY 2011.

2. CUT LENGTHS ARE FOR REFERENCE ONLY

DISTRIBUTION STATEMENT A

THIS DOCUMENT IS APPROVED FOR PUBLIC RELEASE; DISTRIBUTION IS UNLIMITED.

REV LEVEL	–	–	–													
SHEET NO.	1	2	3													

REVISION STATUS OF SHEETS

INTERPRET THIS DRAWING IN ACCORDANCE WITH ASME Y14.100

UNLESS OTHERWISE SPECIFIED:
DIMENSIONS ARE IN INCHES
TOLERANCES:
ANGLES ±
FRACTIONS ±
2 PLACE DIM ± NA
3 PLACE DIM ±

DATE	11-05-20
DRAWN BY	C. KRIKORIAN
CHECKED	K. VARNEY
PROJ OFCR	T. SCOTT
APPROVED	K. RYAN
APPROVAL DESIGN ACTIVITY	J. CONNOR
APPLICABLE SPEC	

U.S. ARMY NATICK SOLDIER RESEARCH, DEVELOPMENT & ENGINEERING CENTER
KANSAS STREET, NATICK MA. 01760-5056

SUSTAINMENT POUCH, ASSEMBLY, USMC PACK

NEXT ASSY	USED ON
2-6-0894	2-6-0894

APPLICATION

SIZE	CAGE	DRAWING NO.
A	81337	PL2-6-0891

SCALE: NONE | UNIT WT. | SHEET 1 OF 3

PARTS LIST	U.S. ARMY NATICK SOLDIER RESEARCH, DEVELOPMENT & ENGINEERING CENTER KANSAS STREET, NATICK MA. 01760-5056	CAGE 81337	PL2-6-0891	REVISION LTR – DATE 11/05/20
LIST TITLE SUSTAINMENT POUCH ASSEMBLY, USMC PACK			APPROVED T. S. T. S.	REV AUTH NO. DR-S-010-11 / SHEET 2 OF ____ SHEETS

FIND NO.	QTY RQD – 1	CAGE	DRAWING OR DOCUMENT NUMBER	DWG SIZE	PART OR IDENTIFYING NUMBER	NOMENCLATURE OR DESCRIPTION	MATERIAL SPECIFICATION
1	1		2-6-0924 (1.)		2-6-0924-10	PATTERN, BAG, MAIN	PARA 3.12.7.2
2	1		2-6-0924 (1.)		2-6-0924-8	PATTERN, POUCH TOP	PARA 3.12.7.3
3	1		2-6-0924 (1.)		2-6-0924-3	PATTERN, BACK PANEL	PARA 3.12.7.2
4	1		2-6-0924 (1.)		2-6-0924-1	PATTERN, LID	PARA 3.12.7.2
5	1		2-6-0924 (1.)		2-6-0924-4	PATTERN, GARMENT STRAP	PARA 3.12.7.2
6	1		(1.)			ONE INCH FEMALE SIDE RELEASE BUCKLE	PARA 3.12.1.2.16
7	1		(1.)			GROMMET	PARA 3.12.1.6.1
8	1		2-6-0924 (1.)		2-6-0924-9	WEBBING, 1" WIDE, MAIN BUCKLE, CUT LENGTH 13" (2.)	PARA 3.12.4.1
9	1		2-6-0924 (1.)		2-6-0924-6	WEBBING, 1" WIDE, FLAP BUCKLE, CUT LENGTH 6" (2.)	PARA 3.12.4.1
10	1		(1.)			CORD, CUT LENGTH 28" (2.)	PARA 3.12.10.3
11	AR		(1.)			TAPE, BINDING, 1" WIDE	PARA 3.12.4.5

PARTS LIST	U.S. ARMY NATICK SOLDIER RESEARCH, DEVELOPMENT & ENGINEERING CENTER KANSAS STREET, NATICK MA. 01760-5056	CAGE 81337	PL2-6-0891	REVISION LTR – DATE 11/05/20
LIST TITLE SUSTAINMENT POUCH ASSEMBLY, USMC PACK			APPROVED T. S. T. S.	REV AUTH NO. DR-S-010-11 / SHEET 3 OF ____ SHEETS

FIND NO.	QTY RQD -1	CAGE	DRAWING OR DOCUMENT NUMBER	DWG SIZE	PART OR IDENTIFYING NUMBER	NOMENCLATURE OR DESCRIPTION	MATERIAL SPECIFICATION
12	4		1.			SNAP FASTENER	PARA 3.12.1.5.1
13	1		1.			ONE INCH MALE SIDE RELEASE BUCKLE	PARA 3.12.1.2.10
14	4		2-6-0924 1.		2-6-0924-7	WEBBING, 1" WIDE, WEBBING GUIDES, CUT LENGTH 2 1/4" 2.	PARA 3.12.4.1
15	4		2-6-0924 1.		2-6-0924-5	WEBBING, 1" WIDE, WEBBING STRAPS, CUT LENGTH 8 1/4" 2.	PARA 3.12.4.1
16	4		2-6-0924 1.		2-6-0924-2	WEBBING, 1" WIDE, INSIDE REINFORCEMENT, CUT LENGTH 2" 2.	PARA 3.12.4.1
17	AR		1.			TAPE, BINDING, 1" WIDE	PARA 3.12.4.5
18	1		1.			BARREL LOCK	PARA 3.12.1.1.2
19	1		1.			GROMMET	PARA 3.12.1.6.1
20	4		1.			STIFFENER, PLASTIC, CUT LENGTH 3" 2.	PARA 3.12.3.5
21	AR		1.			THREAD, SIZE E	PARA 3.12.8.2
22	AR		1.			THREAD, SIZE F	PARA 3.12.8.1
23	1	81337	2-6-0904	D	2-6-0904-1	IDENTIFICATION & INSTRUCTION LABEL	PARA 3.25

REVISIONS					
ZONE	LTR	DESCRIPTION	PROJ OFCR	APVD	DATE
	-	INITIAL RELEASE PER DR-S-010-11	T. S.	T. S.	11-05-20

THIS DRAWING HAS BEEN GENERATED AND IS MAINTAINED BY A CAD SYSTEM. CHANGES SHALL ONLY BE INCORPORATED AS DIRECTED BY THE DESIGN ACTIVITY.

NOTES:

1. WORKMANSHIP, CONSTRUCTION, STITCHING AND QUALITY ASSURANCE PROVISIONS SHALL CONFORM TO PURCHASE DESCRIPTION, FAMILY OF IMPROVED. LOAD BEARING EQUIPMENT DATED 10 MAY 2011.
2. UNLESS OTHERWISE SPECIFIED ALL FOLDS, HEMS, AND TURN UNDERS SHALL BE 3/8".
3. ALL STITCHING SHALL BE BACKSTITCHED NOT LESS THAN 1/2 INCH UNLESS TURNED UNDER BY A HEM OR HELD BY OTHER STITCHING.
4. ALL STITCHING TO BE 1/8 INCH FROM EDGE OR APART, UNLESS OTHERWISE SPECIFIED.
5. UNLESS OTHERWISE SPECIFIED, TOLERANCES SHALL BE AS FOLLOWS:
   1/8 INCH OR MORE BUT LESS THAN 2 INCHES --- ±1/16
   2 INCHES OR MORE BUT LESS THAN 10 INCHES -- ±1/8
   10 INCHES OR MORE BUT LESS THAN 36 INCHES - ±1/4
   36 INCHES OR MORE ---------- ±3/8
6. SEAR ALL ENDS OF WEBBING AND TAPE TO PREVENT FRAYING. AVOID FORMING SHARP EDGES.
7. LOCATE FN 23, LABEL, APPROXIMATELY AS SHOWN.

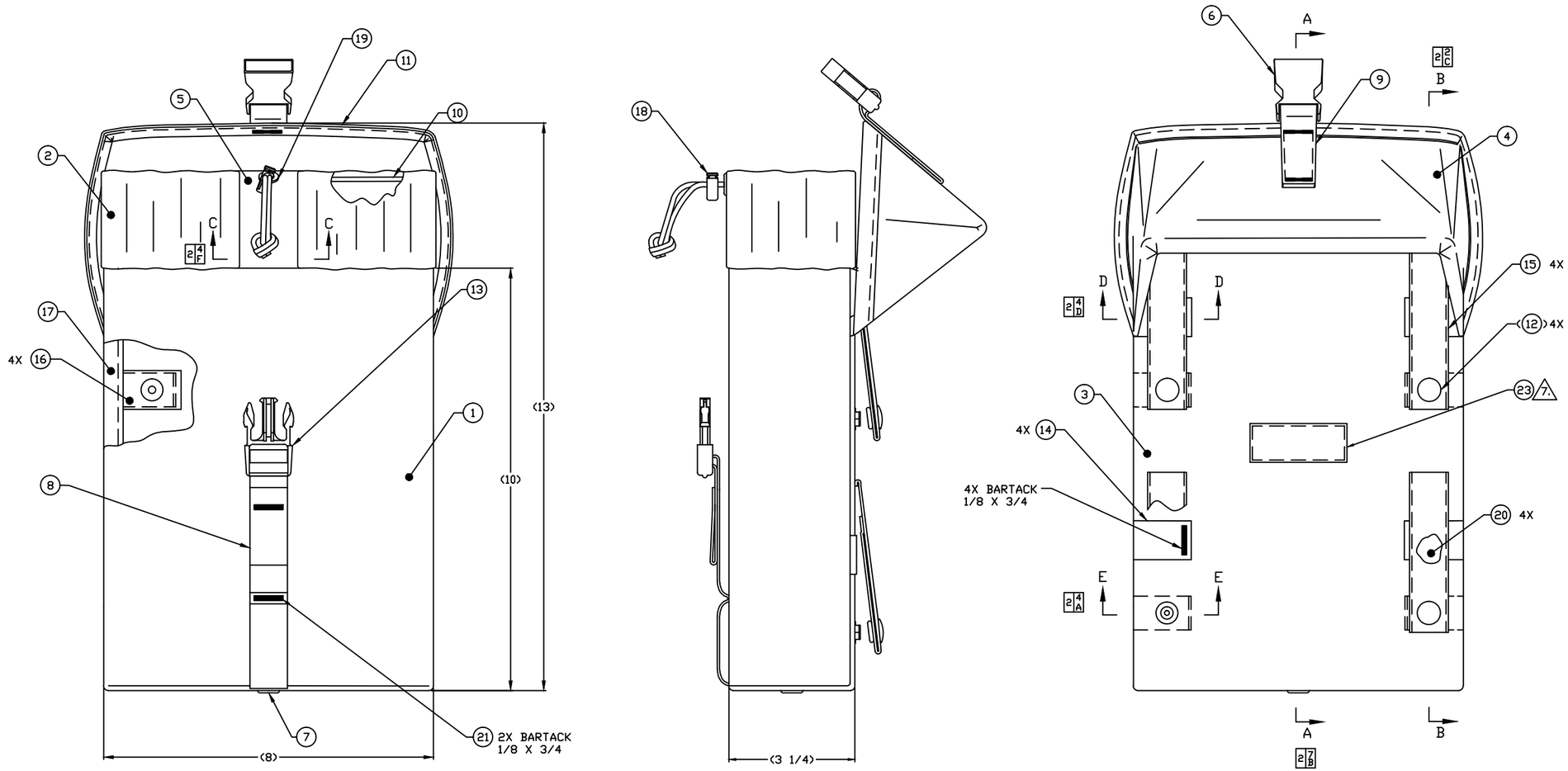

-1

SEE SEPARATE PARTS LIST

DISTRIBUTION STATEMENT A
THIS DOCUMENT IS APPROVED FOR PUBLIC RELEASE; DISTRIBUTION IS UNLIMITED.

REVISION STATUS OF SHEETS		
	-	-
	2	1

REVISION
SHEET

INTERPRET THIS DRAWING IN ACCORDANCE WITH ASME Y14.100

UNLESS OTHERWISE SPECIFIED DIMENSIONS ARE IN INCHES
TOLERANCES:
ANGLES ±
FRACTIONS ±
2 PLACE DIM ±
3 PLACE DIM ±
5.

NEXT ASSY	USED ON
2-6-0894	2-6-0894
APPLICATION	

DATE 11-05-20
DRAWN BY K. VARNEY
CHECKED F. W. K.
PROJ OFCR T. SCOTT
APPROVED K. RYAN
APPROVAL DESIGN ACTIVITY J. CONNER
APPLICABLE SPEC -

U.S. ARMY NATICK SOLDIER RESEARCH, DEVELOPMENT & ENGINEERING CENTER
KANSAS STREET, NATICK MA. 01760-5056

SUSTAINMENT POUCH ASSEMBLY, USMC PACK

SIZE	CAGE	DRAWING NO.
E	81337	2-6-0891

SCALE: 1/1 UNIT WT. SHEET 1 OF 2

1680-9-2

REVISIONS					
ZONE	LTR	DESCRIPTION	PROJ DFCR	APVD	DATE
	-	INITIAL RELEASE PER DR-S-010-11	T. S.	T. S.	11-05-20

THIS DRAWING HAS BEEN GENERATED AND IS MAINTAINED BY A CAD SYSTEM. CHANGES SHALL ONLY BE INCORPORATED AS DIRECTED BY THE DESIGN ACTIVITY.

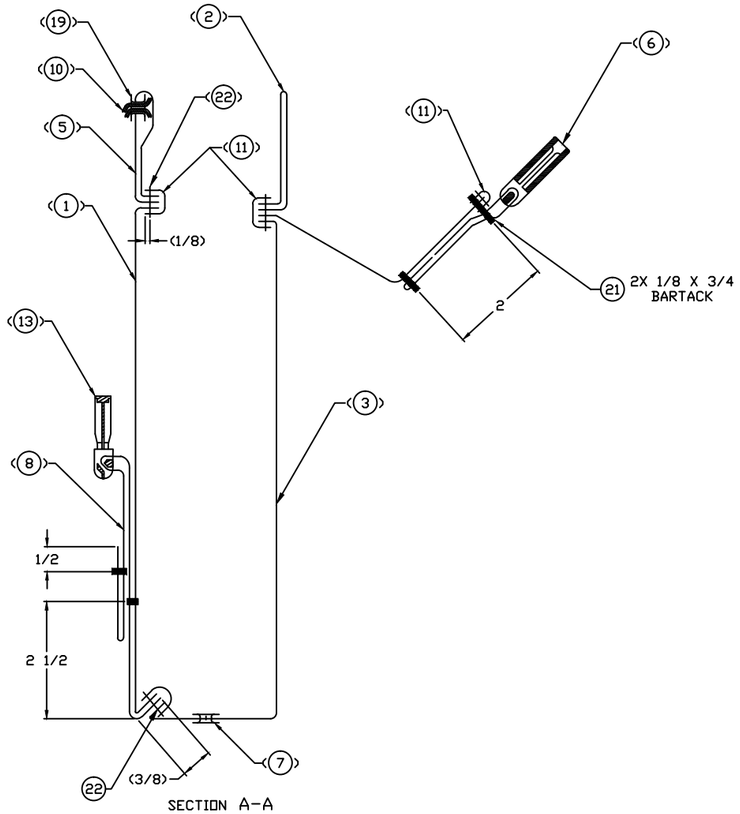

SECTION A-A
TOP COVER AND FN 6 RE-POSITIONED FOR CLARITY
1 2 B

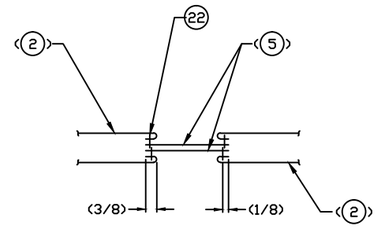

SECTION C-C
1 7 E

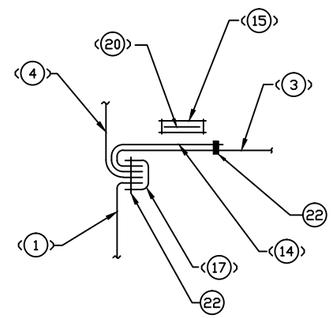

SECTION D-D
4X
1 3 E

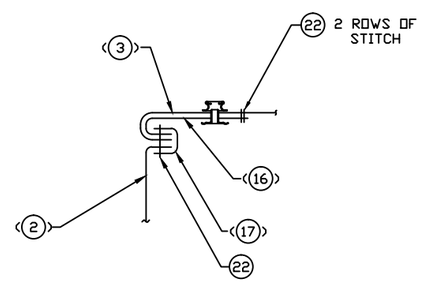

SECTION E-E
4X
FN 15/20 NOT SHOWN
1 3 C

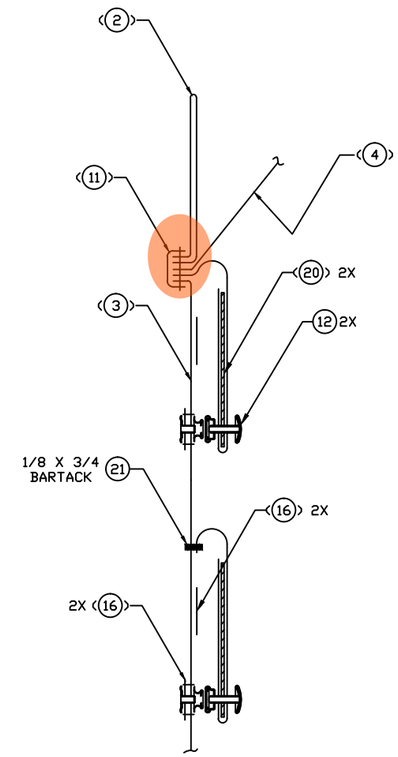

SECTION B-B
2X
1 1 F

DISTRIBUTION STATEMENT A
THIS DOCUMENT IS APPROVED FOR PUBLIC RELEASE; DISTRIBUTION IS UNLIMITED.

SIZE	CAGE	DRAWING NO.
E	81337	2-6-0891
SCALE 1/1	UNIT WT.	SHEET 2